ISSN: 2414-1895 DOI: 10.6919/ICJE.202209_8(9).0008

Feasibility Study on Dismantling the Middle Sleeve of Blast Furnace Tuyere

Fanbo Zeng, Haojie Mu

Zenith Steel Group Company Limited (Nantong), Nantong, Jiangsu 226000, China

Abstract

When replacing the middle sleeve of the blast furnace, the conventional maintenance operation method is to manually drive the sliding hammer and pull out the middle sleeve by hitting the tie rod; if the middle sleeve cannot be taken out by this method, choose the oxygen burning method to burn the middle sleeve. After it is damaged, it softens and becomes smaller, and then pulls it out. We have conceived a blast furnace tuyere middle sleeve removal device. Through the mechanical structure and hydraulic power, the middle sleeve can be successfully removed under the condition that the middle sleeve is in good condition. This device reduces labor, improves labor efficiency, and ensure the safety of inspection and maintenance.

Keywords

Blast Furnace; Tuyere; Middle Set; Disassemble.

1. Introduction

The blast furnace tuyere is the area that blows air to the blast furnace, including straight blow pipes, small sets, medium sets, large sets and other equipment. Usually, we implement the air supply system. The air supply system refers to selecting the appropriate blast parameters and air inlet state of the tuyere under certain smelting conditions to form a certain depth of swirl area, so as to achieve reasonable distribution of the original gas, uniform and active work around the hearth, and sufficient heat. Stable air supply system is the premise of stable gas flow, and is an important condition to ensure stable forward running, high output, high quality and low consumption of blast furnace. Due to the importance of hearth combustion zone in blast furnace ironmaking, it is important to choose a reasonable air supply system. . The air supply system includes parameters such as air volume, air temperature, air pressure, oxygen content in the air, moisture content, fuel injection, and the diameter of the tuyere, the inclination of the tuyere, and the length of the tuyere extending into the furnace. Adjustments made from parameters thus determined are often referred to as "lower adjustments".[1].

When other conditions remain unchanged, under the premise that the furnace conditions are stable and forward, an appropriate increase in the air volume will help activate the hearth and promote the uniform distribution of the gas flow. Therefore, we should give full play to the ability of the fan, and strive to make full use of the fan. However, if the air volume is too large, it will cause material collapse, hanging material or pipeline stroke. In addition to seriously affecting the output, long-term slow air operation will also seriously ablate the furnace wall or cause furnace cooling and hearth freezing accidents. For planned long-term slow wind operations, small tuyere should be used instead. Under normal air volume, the wind pressure limit should be increased after reducing the tuyere. Long-term coal shutdown should reduce the air intake area according to the situation.

Under normal circumstances, the tuyere should be of equal diameter, equal length, uniformity, and full opening. Enlarging the diameter of the tuyere and shortening the length of the tuyere is conducive to activating the edge of the hearth and developing the edge airflow. Reduce the diameter of the tuyere and increase the length of the tuyere, which is beneficial to activate the central area of the hearth,

ISSN: 2414-1895 DOI: 10.6919/ICJE.202209_8(9).0008

develop the central airflow, and protect the furnace wall. Change the diameter of the tuyere and the length of the tuyere. Due to unsatisfactory furnace conditions, when it is necessary to temporarily block the air outlet, it is determined by the length of the section. [2].

The selection of tuyere parameters includes the selection of tuyere diameter, length, inclination and layout. The purpose of the tuyere layout is to obtain suitable wind speed, blast kinetic energy and coke swirl area, so that the airflow distribution is reasonable and the hearth work is even and active. Under certain smelting conditions, after the blast furnace air volume and air temperature are determined, the correct selection of tuyere parameters is an important measure to ensure that the blast furnace runs smoothly. Under normal production conditions, the tuyere is required to be fully open and uniform in diameter and length. Two important parameters for the selection of tuyere, one is reasonable wind speed; the other is suitable blast kinetic energy.

The tuyere is the top priority and the key to the blast furnace, but some equipment is often damaged due to operational errors, quality problems or excessive use time. The replacement of the tuyere equipment is usually time-consuming and labor-intensive, especially the replacement of the middle sleeve. [3].

When replacing the middle sleeve during large and medium repairs of the blast furnace, or when the middle sleeve is damaged during production and needs to be replaced, the maintenance method is to manually drive the sliding hammer and pull out the middle sleeve by hitting the tie rod; if this method If the middle sleeve cannot be taken out, the oxygen burning method is used to burn the middle sleeve to make the softened volume smaller, and then pull it out. These two methods will cause damage to the middle sleeve, so that the middle sleeve cannot be used twice, and this method requires more manpower (at least 6-7 people), consumes more materials (oxygen blowing tube, coke, oxygen) and time (usually more than 4 hours), followed by oxygen burning operation, it is easier to burn the large set, which will further expand the accident and cause economic and human losses. [4].

2. Blast Furnace Tuyere Sleeve Disassembly Device

The technical problem we want to solve is: in the case of protecting the blast furnace middle jacket, it can be easily removed from the inside of the large jacket, which can reduce labor and improve labor efficiency.

In order to achieve the above purpose, we conceived a blast furnace tuyere middle sleeve dismantling device, which is characterized in that: it includes a counterweight frame, a connecting frame, a middle sleeve bracket and a middle sleeve tie rod, and the lower two sides of the middle sleeve bracket are provided with cylindrical columns. A hydraulic jack is arranged in the cylindrical hole, one end of the middle sleeve bracket and the pin shaft are welded and connected, the other end of the pin shaft is welded and connected with the connecting frame, and the connecting frame passes through the counterweight frame and is welded on the inner side of one side of the counterweight frame , The hydraulic jack operation box is arranged on the counterweight frame, the hydraulic jack and the hydraulic jack operation box are connected by oil pipes, the top of the middle set of tie rods is reinforced by the first triangular rib plate, and the end of the middle set of tie rods is reinforced by the second triangular rib plate.

When removing the middle sleeve, insert the top of the middle sleeve tie rod into the middle of the middle sleeve, then lower it to hook the middle sleeve, and use two hydraulic jacks on both sides of the end of the middle sleeve tie rod. Start two hydraulic jacks at the same time, pull out the middle sleeve, and pull it to the middle sleeve bracket.

Further, the counterweight frame has four supports to facilitate the hydraulic cart to carry the entire disassembly device.

Further, there are two expanded steel plates above the bracket of the middle sleeve, which is convenient to hold the middle sleeve.

ISSN: 2414-1895 DOI: 10.6919/ICJE.202209_8(9).0008

The blast furnace tuyere middle sleeve dismantling device provided by us has reasonable structure and simple operation. Under the condition of protecting the blast furnace middle sleeve, it can be easily disassembled from the inside of the large sleeve, which reduces labor and improves labor efficiency.

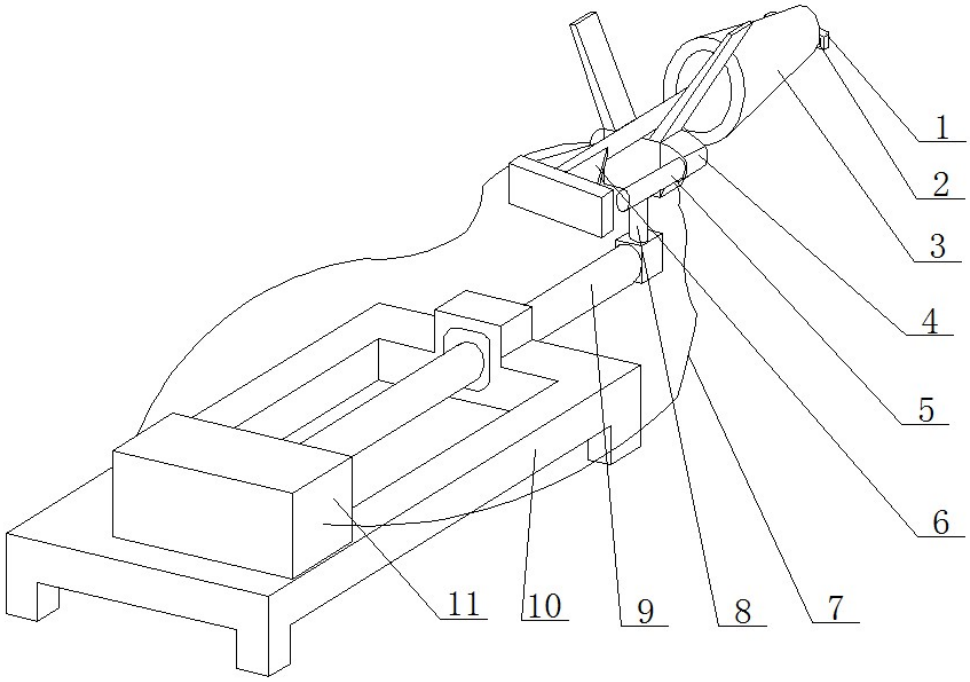

Figure 1. is the structural schematic diagram of the dismantling device in the blast furnace tuyere

In the picture: 1-middle set tie rod, 2-first triangular rib plate, 3-middle set, 4-middle set bracket, 5-hydraulic jack, 6-second triangular rib plate, 7-oil pipe, 8-pin shaft, 9-connecting frame, 10-counterweight frame, 11-hydraulic jack operation box.

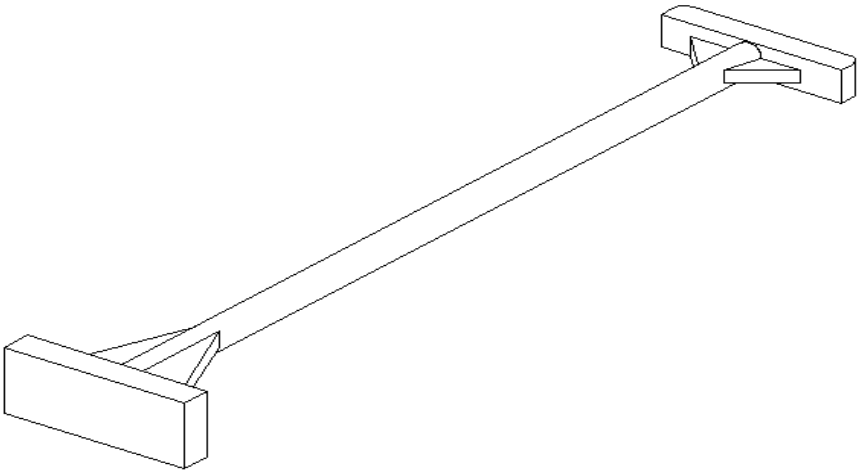

Figure 2. is an enlarged schematic view of the middle sleeve tie rod

ISSN: 2414-1895 DOI: 10.6919/ICJE.202209_8(9).0008

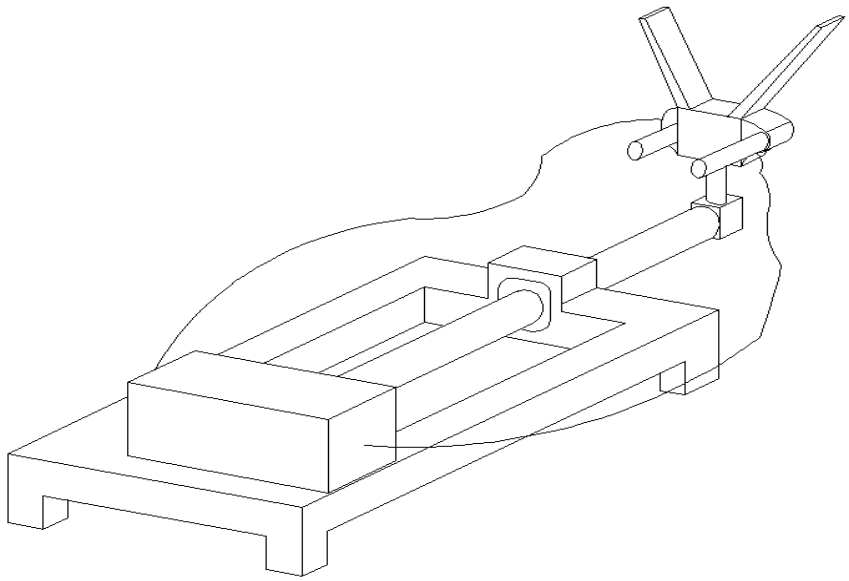

Figure 3. is a partial schematic view of the dismantling device in the blast furnace tuyere

3. Conclusion

The conventional maintenance operation method for replacing the middle sleeve of blast furnace is to manually drive the sliding hammer and pull out the middle sleeve by hitting the tie rod; if this method cannot remove the middle sleeve, choose the oxygen burning method to burn the middle sleeve to make it After the softened volume becomes smaller, pull it out. The blast furnace tuyere middle sleeve dismantling device we conceived can be easily disassembled from the inside of the large sleeve through the mechanical structure and hydraulic power assistance, while ensuring that the middle sleeve is in good condition. This device has a reasonable structure, simple operation and reduced labor. , improve labor efficiency.

References

[1] Xiang Zhongyong, Wang Xiaoliu. Blast Furnace Design-Theory and Practice of Ironmaking Process Design. Beijing: Metallurgical Industry Press, 2007.

[2] Yan Yunjin, Ironmaking Machinery. Beijing: Metallurgical Industry Press, 2001.

[3] Wang Ping, Ironmaking Machinery. Beijing: Metallurgical Industry Press, 1997.

[4] Wang Qingchun, Metallurgical General Machinery and Smelting Equipment. Beijing: Metallurgical Industry Press, 1996.