ISSN: 2414-1895 DOI: 10.6919/ICJE.202208_8(8).0141

The Design of Intelligent Environment Monitoring with Android and 89C52

Longqing Zhang*, Xinwei Zhang, Liwei Tian, Yanghong Zhang, Lei Yang, Peipei Li

Guangdong University of Science and Technology, Dongguan, Guangdong, 523083, China

Abstract

With the improvement of people's living standards, people are increasingly interested in using intelligent technology to improve their living With the improvement of people's living standards, people are increasingly interested in using intelligent technology to improve their living standards,Internet of things as a new era of technology and a mainstream technology . Combined with the technology of Internet of things and the premise of smart home, this paper constructs an intelligent environment monitoring system This article mainly adopts the idea of soft and hard combination to realize the system. The HLK-M35 serial WIFI module is used to build the network. The collection of temperature and The collection of temperature and humidity data is the use of DHT11 temperature and humidity sensor, the collection of light data is mining. The GY30-BH1750FVI light sensor is used, and the The GY30-BH1750FVI light sensor is used, and the switch of various electrical appliances is realized by using relay (DC5V). In terms of software, it can be divided into four parts, the control program of relay, the data collection data of sensors, and the transmission program Android mobile phone is used to display indoor environmental data collected by sensors through WIFI.

Keywords

Internet of Things; STC89C52 Micro Controller; Sensor; WIFI.

1. Introduction

With the development of modern technology and techniques, people's requirements for quality of life are also increasing, and the intelligence of items is constantly proposed. This design mainly uses STC89C52 MCU as the lower computer and Android cell phone as the upper computer, using WiFi to make the two connected, the cell phone opens the WLAN connection to the route, on the cell phone, through Socket communication to receive the data from the upper computer, the temperature and humidity, light will be displayed, the cell phone can also be connected to the WiFi through the route to issue When the WiFi module receives the command, it communicates with the serial port of STC89C52 MCU through its own serial port, and when the STC89C52 receives the command, it can control the relay.

2. Related Work

Intelligent industry in foreign countries compared with domestic, foreign intelligent goods price civilian, relatively cheap relative to the domestic, the price is relatively affordable for the average family. As in the case of smart home development in foreign countries, the development direction of smart home is different in each region. For example, in the United States, smart home is like a living commodity, and its positioning market standard is comfort, convenience, entertainment, health and safety, and the main market direction is home security, home automation, entertainment, environment and energy management. In Japan, the intelligence is relatively technological. In Japan, the intelligence is basically integrated with the daily life of Japanese people, and the parking lot has

ISSN: 2414-1895 DOI: 10.6919/ICJE.202208_8(8).0141

realized the intelligent processing, and the biometric automatic identification technology has been adopted to realize the identification system and thus the intelligent processing of automatic doors. Blood pressure monitors are also installed on the commode pads used in living homes, and weight meters are installed on the floor, and the monitoring results can be displayed on a monitor and the results saved. Spain's intelligent development is inclined to art, home design concept is unique, when the sun is strong, LED lights will automatically go out, sensors to sense weather changes are installed on the roof of the building, to monitor the difference between outdoor and indoor environmental changes in real time. In Korea, there is a home security system called Nespot, which not only combines wired and wireless networks, but also enables real-time observation of indoor environmental data through cell phones or computers wherever you are, as well as remote control of home appliances, such as controlling light switches. This system enables intelligent monitoring of the indoor environment and reduces energy consumption.

3. System Design

The design of this system can be divided into three major parts: monitoring unit, data transmission unit, and control unit.

Monitoring unit: mainly for the display of temperature and humidity sensor module and light sensor module data.

Data transfer unit: Use WiFi module to connect between STC89C52 and Android phone, and use serial port to connect between STC89C52 and sensor to realize the communication between data.

Processing unit: Through the serial port carried between each module itself, temperature and humidity sensors and light sensors to collect data and send to the microcontroller through the serial port. When the microcontroller receives the command to control the relay, the switch control of the relay is carried out.

3.1 General Design of Hardware

The main controller used in this design is STC89C52 microcontroller, which communicates with DHT11 temperature and humidity sensor and GY-30 digital light module through serial communication, and the cell phone then communicates with the microcontroller through HLK-M35 WiFi module.DHT11 temperature and humidity sensor is responsible for temperature and humidity data collection, and GY-30 digital light module is responsible for light data collection. The sensor sends the collected data to the microcontroller for storage and processing, and the microcontroller sends the received temperature, humidity and light data to the cell phone for display and processing. The cell phone sends the command to control the relay to the microcontroller, the microcontroller makes judgment and sends it to the relay module, the relay receives the command for switch control.

3.2 STC89C52 Microcontroller

This design mainly uses the STC89C52 microcontroller as the main control, 89C52 microcontroller is STC under the 51 series of products, is a low-power, high-performance CMOS 8-bit microcontroller. 89C52 compared to 89C51, 52 microcontroller Flash program storage space than 51 microcontroller, 51 storage space for 4K, while 52 storage space for 8K. 52 microcontroller compared to 51 microcontroller, but also increased a timer 2, approximation, 52 microcontroller is 51 microcontroller enhanced version. 89C52 microcontroller requires 5V DC power supply, a total of 40 pins, respectively, 32 I/O pins ports are PO port, P1 port, P2 port and P3 port, VCC pin represents the positive side of the power supply, RST pin for reset input, ALE/PROG pins for accessing external program memory and programming input pulses respectively, PSEN pin for external program memory selector signal, EA/VPP pin for accessing external program memory control signal, XTAL1 and XTAL2 pins for using crystal oscillator. The schematic diagram of the 89C52 microcontroller used in this design is shown in Figure 1.

ISSN: 2414-1895 DOI: 10.6919/ICJE.202208_8(8).0141

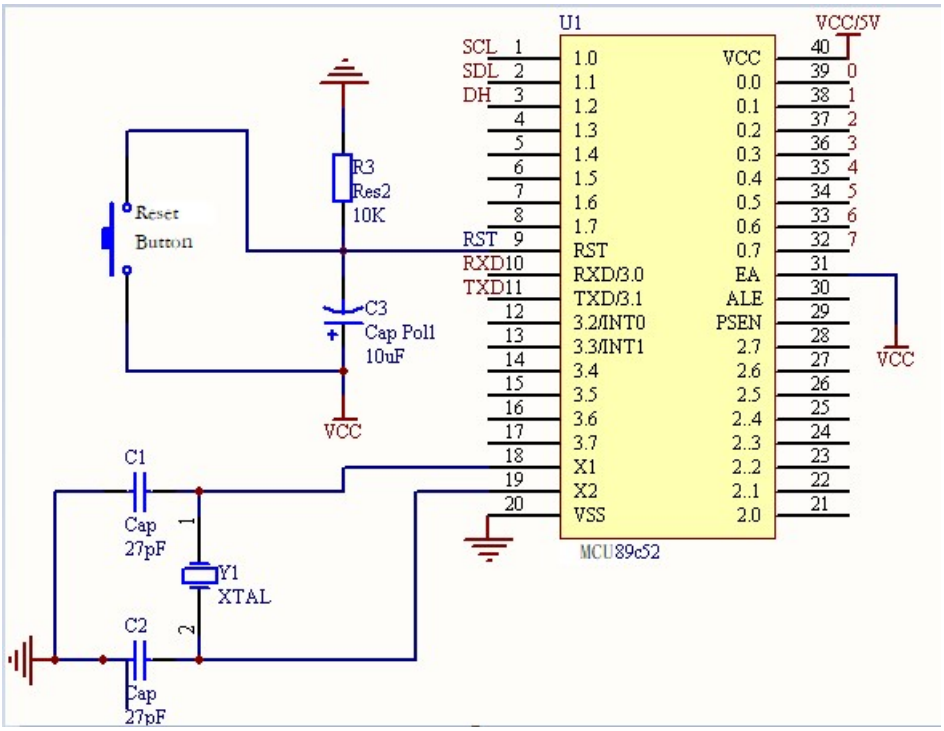

Figure 1. 89c52 schematic diagram

3.3 Selection of Auxiliary Modules

3.3.1 HLK-M35 Serial Port WIFI Module

HLK-M35 serial port is a low power consumption, small size WiFi module. It enables the serial device of microcontroller to transmit data with other devices through Internet network and realize the communication between data[5] . It not only supports a variety of application layer protocols and supports a variety of operating methods, and comes with a TCP/IP protocol stack, through the AT command to configure the WiFi module, the basic parameters of the module as shown in Table 3-2. The HLK-M30 module has 38 pins, of which the I/O level voltage must be 3.3V. There are 3 GPIO pin ports, GPIO00,GPIO01,GPIO02, which can be controlled by AT command or UDP.

The HLK-M35 serial WiFi module is connected to P3.0, P3.1 and RST port numbers of the microcontroller, P3.1 and P3.1 correspond to the receiver and transmitter, respectively, to receive and send data with the microcontroller by means of serial communication. The circuit schematic is shown in Figure 2.

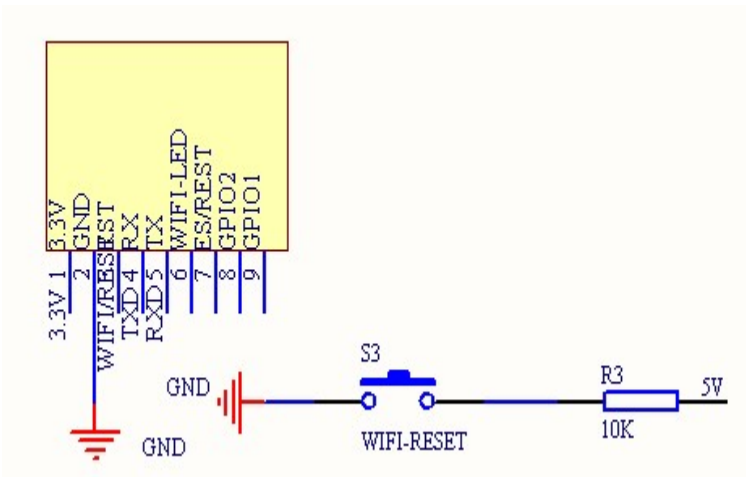

Figure 2. HLK-M35 schematic diagram

ISSN: 2414-1895 DOI: 10.6919/ICJE.202208_8(8).0141

3.3.2 DHT11 Temperature and Humidity Sensor Module

This module is composed of two components to measure temperature and humidity by resistive moisture sensing element and NTC temperature measuring element, because of its small size, low power consumption and long transmission distance up to 20 meters. This design temperature and humidity sensor is connected to the microcontroller P1.2 port. By adding a 4.7K pull-up resistor to the output of the signal to ensure that the entire temperature and humidity data output can be received and judged by the microcontroller, thus making it highly reliable and stable.

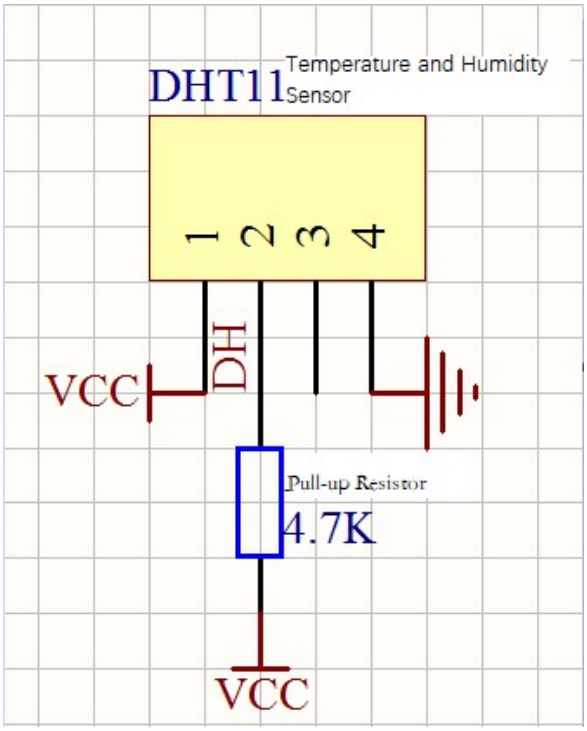

Figure 3. DHT11 schematic diagram

4. Software Design and Implementation

When the power is turned on, the 52 MCU also turns on the working state with it, and will monitor whether there is a control command sent by the android phone at any time, first of all, to determine whether the work command, after receiving the corresponding work command, it will make the corresponding control to the relay, such as receiving the control to and relay 2, then the relay on the control board will make the corresponding action, when the relay is opened, the The corresponding LED will light up when the relay is turned on, instead of turning off the relay, the LED goes off.

4.1 Acquisition Procedure of DHT11 Temperature and Humidity Module Data

DHT11 temperature and humidity module transmits data to the 52 MCU P1^2 port through the serial port, sending 5 bits of hexadecimal data to the serial port, respectively the high 8 bits of temperature, low 8 bits of temperature, high 8 bits of humidity, low 8 bits of humidity, check 8 bits[9] . When the judgment signal bit is high state, pull the bus low and wait for DHT11 to respond to the signal, after sending 80us low level to respond to the start signal and waiting for 30us to respond to the signal, it can output high level. When the judgment signal is low state, send the response signal, pull the level high 80us, and use it to send data, when the last bit of data transmission is finished, pull the bus low 50us and then change to idle state. The reception of data is shown in Table 1 below . A complete data transfer is 40 bits, high first, and the data format is 8 integer and 8 decimal bits of humidity, 8 integer and 8 decimal bits of temperature and 8 check bits of data.

ISSN: 2414-1895 DOI: 10.6919/ICJE.202208_8(8).0141

Table 1. Receipt of temperature and humidity data

```
COM();U8RH_data_H_temp=U8comdata;
COM(); U8RH_data_L_temp=U8comdata;
COM(); U8T_data_H_temp=U8comdata;
COM();U8T_data_L_temp=U8comdata;
COM();U8checkdata_temp=U8comdata;
```

4.2 Data Acquisition Procedure for Light Sensor

When the light sensor module receives power, the BH1750 is initialized first. The measurement commands "0X01" and "0X10" are input via the Single_Write_BH1750 method, which indicate the power-on operation and the measurement using the continuous H resolution mode for 120ms, respectively. The measured data is saved in the form of bytes. The data acquisition format of this module is divided into high byte and low byte, high byte Bytes[15-8] and low byte Bytes[15-8]. When the high byte of data is "10000011" and the low byte is "10010000", the data is calculated as (215+29+28+27+24)/1.2 =28067 lx.

Table 2. Light sensor data acquisition

```
Init  BH1750(); //Initialize BH1750
Single_Write_BH1750(0x01); // power on
Single_Write_BH1750(0x10); // H- resolution mode
delay_nms(180); //delay 180ms
Multiple_Read_BH1750(); //Continuously read out the data and store it in BUF
dis  data=BUF[0];
dis_data=(dis_data<<8)+BUF[1]; //composite data
temp=(float)dis_data/1.2; //read of light data
```

5. Results

After powering on the main control board, the red light of the main control board lights up, and when the WiFi module turns on and works, the mobile app establishes a connection with the main control board, the mobile app displays the temperature, humidity and light data from the DHT11 temperature and humidity sensor module, and six buttons for relay control switches.

When the site makes changes to the ambient temperature and light, the data displayed on the cell phone page will also change, but the light data cannot be measured stably in real life because of the environmental factors at the site. After the environmental factors are changed, the comparison of the test data of temperature and humidity with the real data are shown in Table 4 and Table 5, respectively. The horizontal axis indicates the number of tests, and the vertical axis indicates the test value.

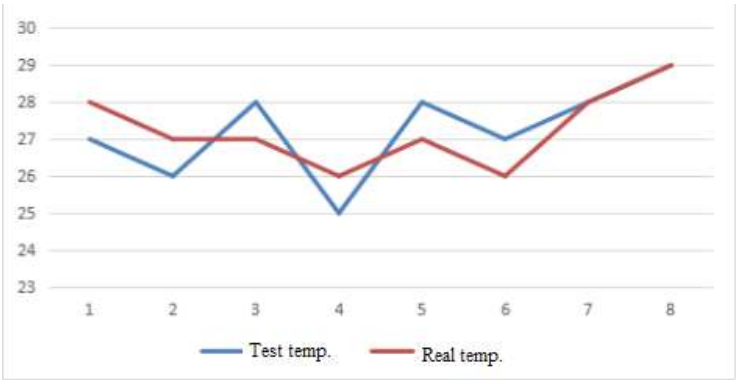

Table 4. Temperature test table

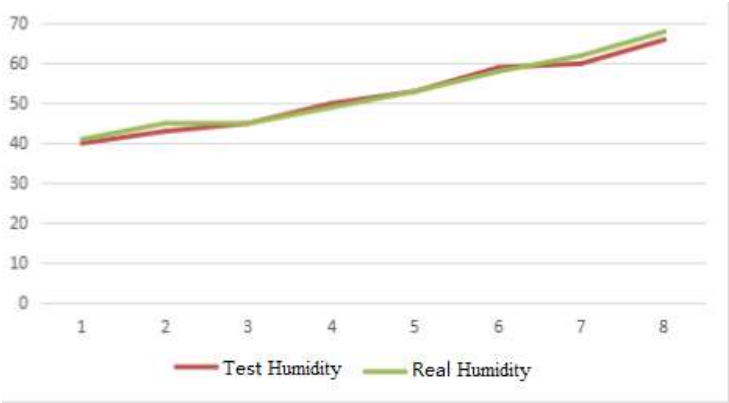

Table 5. Humidity test table

6. Summary

The design first uses the STC89C52 microcontroller as the main control terminal, through the WiFi module to achieve the connection with the Android cell phone, when WiFi and routing is established, the cell phone is connected through the route, the data read in the light sensor module, temperature and humidity sensor module is sent by the route to the Android using Socket to achieve the display of the data, the 89C52 microcontroller also through the The 89C52 MCU also receives the commands returned by the android phone through the route to control the relay module and realize the switch operation of home appliances.

Acknowledgments

Funding Statement:This research was financially supported by Special Projects in Key Areas for General Universities in Guangdong ProvinceNO.2021ZDZX1077,in part of Natural Science Foundation of Guangdong Province of China with the Grant No.2020A1515010784,also supported by Guangdong Provincial Innovation and Entrepreneurship Training Program Project NO.2017 13719017, Innovation and Improve School Project from Guangdong University of Science and Technology NO. GKY-2019CQYJ-3 College Students Innovation Training Program held by Guangdong University of Science and Technology NO.1711034, 1711080, and NO.1711088.

References

[1] Gao JL, He JB. Internet of things RFID principles and technologies (2nd edition) [M]. Beijing: Electronic Industry Press,2017.1.

[2] Sun Bo. The application of sensors in the new high school physics curriculum[J]. Physics Teaching Discussion, 2009, 27(10):75-78.

[3] X.C. Zhang, X.J. Wang. Closed-loop control of microcontroller-based At89S52 stepper motor[J]. Agricultural Equipment Technology, 2011(3):31-32.

[4] Wang Chao, Huang Cui Cui, Liu Meizhong. Minimum system design based on MSP430F149 microcontroller and its application[J]. Modern Property (Upper Journal), 2012(1):28-30.

[5] Zhang Qi. Design and implementation of temperature and humidity measurement and control system for Phalaenopsis orchid greenhouses based on Android platform [D]. Anhui Agricultural University, 2016.

[6] Wang Zhihong, Bai Cuizhen. Design of DHT11-based multi-point temperature and humidity alarm system for laboratory [J]. Shanxi Electronic Technology, 2011(4):45-46.

[7] Liu Bo. Design of BH1750-based light intensity data acquisition system [J]. Henan Science and Technology,2016(13):27-28.

[8] Han Danao, Wang F. Applicability study of DHT11 digital temperature and humidity sensor [J]. School of Science and Engineering, Jilin University, 2013.

[9] Li Bolong. Intelligent environmental monitoring system based on wireless communication [D]. North University of Technology, 2016.

ISSN: 2414-1895 DOI: 10.6919/ICJE.202208_8(8).0141

[10] Lin Chaoxing. Research on IOT monitoring system based on Android cell phone [D]. Xiamen University, 2014.

[11] Huang Xiaopei. Development and implementation of environmental monitoring system for intelligent terminals [D]. Donghua University, 2014.

[12] Zhou Peng. Design of temperature detection system based on STC89C52 microcontroller [J]. School of Information, Huaqiao University, 2014.