ISSN: 2414-1895 DOI: 10.6919/ICJE.202206_8(6).0057

# Research on Machining Process of Ball Screw Sub-thread Raceway

Haowei Cui

Department of preparatory education, Baise University, Baise Guangxi 533000, China

## Abstract

**Ball screw is the most commonly used transmission element in machine tools and precision machinery. Its main function is to convert rotary motion into linear motion, or torque into axial repeated force, while having the characteristics of high precision, reversibility and high efficiency. Due to the small frictional resistance, ball screws are widely used in various industrial equipment and precision instruments. Because of the common application of ball screw subs, the diversification of its processing method is bound to appear. In this paper, we analyze the machining process of the external thread raceway of the ball screw, and find out the applicable machining range of different machining methods and compare and analyze the advantages and disadvantages of each machining method.**

## Keywords

**Ball Screw; Machining Process; Sub-thread Raceway.**

## 1. Introduction

Following the progress of manufacturing industry, the application of ball screw is becoming more and more widespread. As the occasions of implementation may change, the requirements for its length, size and precision are not the same in all aspects, so we have some requirements for the error of ball screw substructure, which in turn brings inconvenience to the manufacturing of ball screw substructure and makes the production cost of ball screw substructure much higher. Here, we investigate the processing methods of various ball screw substructure, so as to point out the most economical and efficient processing methods for the processing of ball screw substructure with different characteristics.

## 2. The Basic Structure and Technical Requirements of External Thread Raceway of Ball Screws

### 2.1 The Basic Structure of Ball Screw

Ball screw is further developed from the traditional screw, it can realize the mutual transformation of rotary motion and linear motion [1], it has the advantages of high life, can realize micro-feed and high-speed feed and avoid axial clearance. It is mainly composed of screws, nuts and balls. As a result of its different types and structure discrepancies, the related working characteristics, transmission accuracy and manufacturing process are also different, and the basic structure is shown in Figure 1 as follows.

ISSN: 2414-1895 DOI: 10.6919/ICJE.202206_8(6).0057

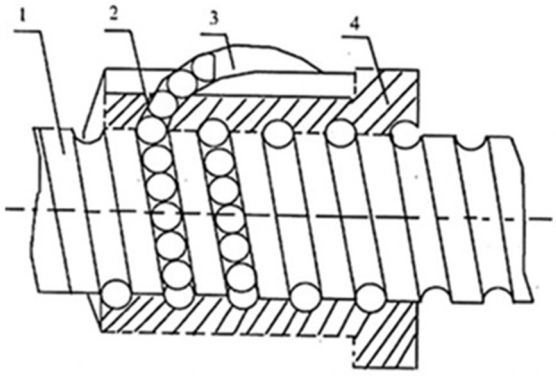


1.lead screw 2.ball 3.ball return pipe 4.nut

**Figure 1.** The basic structure of ball screw

## 2.2 Technical Requirements for External Thread Raceway

For different types of ball screw structures, they are basically the same except for the shape of the threaded raceway surface, so the processing of the ball screw is mainly concerned with the processing of the threaded raceway surface. According to the mechanical design manual and the actual processing situation [2], we can know that the factors influencing the processing of the threaded raceway profile are the accuracy of gear shape, the accuracy of guideways, the surface roughness, and the form accuracy on raceways.

### 2.2.1 Accuracy Requirements of Gear Shape

In the double arc gearing, the position of the contact points between the ball and the raceway on both sides, determined by the eccentricity and the arc diameter, directly affects the smoothness and load carrying capacity of the screw substructure operation. It is necessary to control the eccentricity and arc radius to maintain the contact point position within the required range and to ensure the symmetrical accuracy of the contact point position on both sides.

The arc size, the outer circle of the screw and the center position of the steel ball should be matched. As the ball is reversed in the cycle, it climbs obliquely from the screw thread raceway to the top position of the screw tooth, goes over the top of the tooth and then returns to the adjacent raceway. The three position errors can lead to ball stalling and stacking.

### 2.2.2 Accuracy Requirements of Guideways

Based on the transmission principle of the screw, the displacement of the screw is equal to the rotation angle multiplied by the lead. When there is a lead error, a displacement error exists between the actual displacement of the screw and the theoretical position. This error is mainly controlled from two aspects: target travel deviation and travel variation, and the manner of control depends on different situations.

### 2.2.3 Requirements of Surface Roughness

The motion of the ball in the raceway is a composite motion consisting of the rotation around the axis of the screw, the rotation around the center of the ball, and the slippage in the raceway. The lower the roughness of the raceway, the fewer the frictional resistance of the ball, the less the change of the motion attitude, and the smoother the motion.

### 2.2.4 Requirements of form Accuracy on Raceways

The common form errors of ball screw manufacturing include coaxiality error, cylindricity error, parallelism error, and circular runout error. However, the form error that has the greatest influence on the accuracy of ball screw is mainly the circular runout error. Therefore, the control of ball screw substructure accuracy is primarily reflected in the regulation of circular runout error. It means the smaller the circular runout error, the higher the accuracy.

ISSN: 2414-1895 DOI: 10.6919/ICJE.202206_8(6).0057

# 3. Machining Method of Thread Raceway on Ball Screw Substructure

## 3.1 Grinding

Grinding is a machining method of the workpiece using a tool equipped with abrasive grains. Compared to turning and milling, grinding of ball screw thread raceways has the following characteristics. It possesses a high machining accuracy and a small surface roughness. The grinding speed is significant, which can easily lead to organizational changes and shape deformation of the workpiece. The grinding wheel has a "self-sharpening" effect during the grinding process. Nevertheless, the grinding process has a limited work efficiency because the depth of cut is minimal and the metal layer removed in one grinding process is quite thin. Therefore, it is generally used for semi-finishing, finishing or super-finishing.

## 3.2 Cyclone Milling

Cyclone milling is a relatively new machining process. The process consists of four main motions: the feed rotational motion of the workpiece by itself, the axial feed motion of the tool relative to the workpiece, the rotational motion of the tool and the radial cutting motion of the tool relative to the workpiece. When using cyclone milling, it is necessary to ensure the parallelism between the workpiece axis and the running guide of the tool head holder, and the accuracy of the position of the multiple tool heads on the tool head and the high dynamic stiffness required by the process system. This machining method enables gravity cutting and is environmentally friendly and economical without the need for coolant during the machining process, so it is three times more efficient than ordinary milling. In addition, the surface roughness value of the workpiece obtained after machining can reach Ra0.4um, which can reduce or eliminate grinding and polishing processes. In addition, the process can form short C-shaped chips making them easy to handle. Cyclone milling is actually a semi-finishing process for machining screw threads. Unfortunately, there are still many factors affecting the machining accuracy, so we should pay attention to the occasion to apply this approach.

## 3.3 Hard Turning

Hard turning focuses on the turning of rotating workpieces with the linear motion of the turning tool. In the processing of ball screw thread raceway, turning features the following: it is easy to ensure the position accuracy of each workpiece surface [3]; it has a high cutting volume and can carry out high-speed cutting, which is conducive to improving production efficiency; the tool is simple, and it is more convenient to manufacture, sharpen and install the turning tool.

## 3.4 Cold Extrusion Molding

The principle of cold extrusion molding of ball thread raceways is based on the frictional force formed between the rolls and the metal round bar stock [4]. The process is that the metal bar is brought into the extrusion molding zone under the action of helical pressure, followed by plastic deformation under the action of the extrusion molding pressure. Cold extrusion molding requires a uniform internal structure and a high plastic strain capacity of the workpiece to be processed, and a modulated hardness of not more than 35 HRC. Cold extrusion molding has many characteristics, such as high efficiency in the utilization of resources, avoidance of "ripples" and "burns on the tooth surface", which can be easily produced by grinding. The production efficiency is extremely efficient and the production capacity is large; the pollution impact on the environment is little; the processing process is less and the energy consumption is less, which is conducive to the realization of production automation.

# 4. Comparison of Machining Methods for Ball Screw Substructures

Through the studies above, we can understand that grinding, cyclone milling, hard turning and cold extrusion molding are the common processing methods for ball screws in China at this stage. Now, we will make some comparisons on some characteristics of these processing procedures.

ISSN: 2414-1895 DOI: 10.6919/ICJE.202206_8(6).0057

### 4.1 Grinding Process

The method of grinding with the wheel is a broadly accepted processing technique at present. It is simple to operate; however, its productivity is inadequate for the current production requirements due to the relatively poor efficiency. In order to improve this defect, some customers apply a deep cut and slow progression grinding process on grinding machines to increase yield [5]. This process can adapt to the rough machining of various diameters and lengths of the screw, but it also has the following problems: the large feed depth of the single process results in a large heat generation in the grinding area, which makes the quality of the ball screw decrease significantly; the need for cooling during grinding generates a large amount of oil fumes to influence the quality of the work area environment; the slotted screw requires further semi-finishing and finishing grinding to make the processing less efficient.

### 4.2 Cyclone Milling Process

The research of cyclone milling technology has been relatively mature in foreign countries. In recent years, China's research on this technology has also achieved greater results. The cyclone milling tool is a cubic boron nitride forming tool, and the shape of the tool is made to be the same as the fillet thread raceway arc, so that a single cut can achieve the precision of semi-finish grinding, which improves the efficiency and reduces the number of clamping. In addition, cyclone milling can form the thread raceway in one pass, and the workpiece can be finely ground directly, effectively reducing the semi-finish grinding process and increasing the efficiency of the process. Furthermore, the milling disc can have up to 12 cutting tools at the same time to disperse the cutting force of each tool to reduce the vibration and bending deformation of the workpiece. The cutting heat of cyclone milling can be instantly carried away by 90% of the iron chips, which effectively avoid the burn annealing phenomenon during grinding and improve product quality. It is gratifying that there is absolutely no need for cooling during milling, and it does not produce oil fumes to pollute the environment. Through the above analysis, it can be seen that the semi-finish machining of longer screw rods and the machining of larger screw rods with longer diameters are most suitable for cyclone milling.

### 4.3 Hard Turning Process

With the development of CBN tool technology, the hard turning process is now also more widely used in the rough machining of ball screws. To exploit the advantages of CBN tools, the rotational speed of the workpiece is generally higher. Since the rotational speed of the workpiece is rather high during hard turning, the cutting force on the tool is relatively strong, so the workpiece is prone to vibration and bending deformation when machining ball screws. However, the energy consumed in machining ball screw by hard turning is only 1/5 of that of normal grinding, and no coolant is needed to eliminate the device related to coolant. Therefore, it is more appropriate to choose hard turning process for ball screw processing with less than 6 mm pitch and shorter than 1 m length.

### 4.4 Cold Extrusion Molding Process

Cold extrusion technology is a high precision, efficient and high quality, low consumption advanced production process technology, which is more often employed in the large-scale production of small and medium-sized forgings. Compared with other machining processes, it has many incomparable advantages of improving the mechanical properties and surface roughness of parts and reducing the cost of manufacturing parts. Nevertheless, there are also processing defects in the processing of the high requirements for the die, the need for a large press tonnage and cold extrusion process after the plasticity of the workpiece, impact toughness will become worse, the internal residual stress will become larger, prone to stress corrosion. Furthermore, it is generally suitable for rough machining of ball screw in mass production owing to the expensive tooling cost.

## 5. Conclusion

Nowadays, the rapid expansion of China's machinery manufacturing industry has contributed to the sustainable progress of processing and fabrication technology. This article mainly introduces several

ISSN: 2414-1895 DOI: 10.6919/ICJE.202206_8(6).0057

processing methods for ball screws as well as the advantages and disadvantages of the relevant processing methods in practical application. We principally referred to the current processing technology development by drawing on the more widely used processing technology, which also has certain reference and guidance significance in actual production.

## References

[1] Zhao, Jiajia, et al. "Investigation of load distribution and deformations for ball screws with the effects of turning torque and geometric errors." Mechanism and Machine Theory 141 (2019): 95-116.

[2] Contents, Table O F , et al. "Machinery's Handbook 28th Edition." (2008).

[3] Information on http://baike.baidu.com/view/3762840.html.

[4] Wang, X. Q. , et al. "Forming Principle and Error Analysis of Ballscrew Manufactured by Cold Rolling." Advanced Materials Research 670(2013):85-90.

[5] Information on https://www.jixiecun.com/thread-51103-1-1.html.