ISSN: 2414-1895 DOI: 10.6919/ICJE.202205_8(5).0072

Design and Implementation of Self-balancing System based on Inclination Sensor

Yuan Ji[a], Heng Chen[b], Wenchao Jia[c], Wenjing Gao[d]

School of XiJing University, Shaanxi 710123, China

[a]2572457852@qq.com, [b]chenhenrys@qq.com, [c]1519164879@qq.com, [d]980685939@qq.com

Abstract

In this design, STC12C5A60S2 single chip microcomputer is used as the control center of the balance control system, and adxl345 sensor is selected to monitor the attitude of the bearing instrument platform in real time; In the hardware control of the system, the stepping motor is selected to control the expansion and contraction of the rope to control the horizontal angle of the bearing instrument platform. The attitude sensor adxl345 and ultrasonic sensor can measure the attitude of the bearing instrument and the height of the platform. The STC12C5A60S2 single chip microcomputer and the attitude sensor are used to transmit and process the output signal, and the serial port is used to transmit it to the STC main control single chip microcomputer to control the three stepping motors. Finally, the balance of the system is achieved, and the attitude change and height change are displayed through the serial port screen.

Keywords

Self Balancing; Attitude Control; Inclination Sensor; Bluetooth Connective.

1. Introduction

With the development of society, the requirements for the automatic maintenance level of various platforms are more and more strict, but the equipment that can meet the requirements is expensive and bulky. Over the years, the accuracy of various sensors has become higher and higher, and the control system is closed-loop control, so it is not difficult to achieve self balance.[1].

2. System Design Scheme

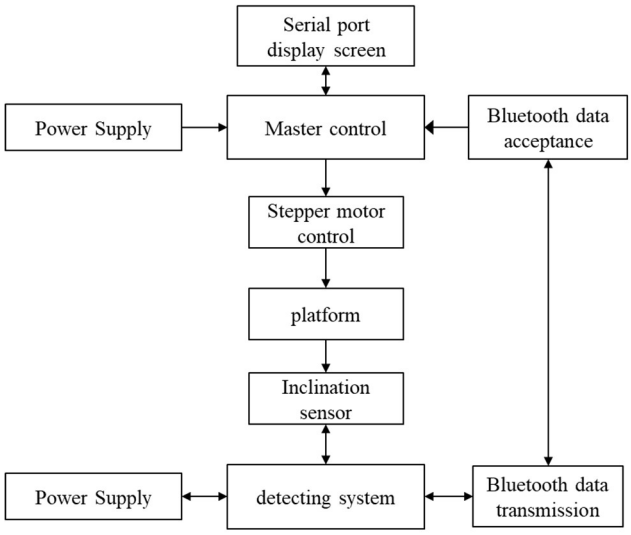

Figure 1. system block diagram

Volume 8 Issue 5, 2022
DOI: 10.6919/ICJE.202205_8(5).0072

This design mainly includes power module, detection system module and main control system module. The CPU of the detection system uses STC single chip microcomputer as the information acquisition center. After the acquisition, the data is transmitted to the main control system through Bluetooth. The main control system controls the stepping motor through algorithm, and finally controls the lifting of the bearing instrument platform. After balancing, start to detect the height of the platform, display it through the serial port screen, and then press the key to realize the lifting of the platform. The system block diagram is shown in Figure.

3. Hardware Design

3.1 Controller Module

It is composed of main controller and control system. The main control system is responsible for the control of the motor and the realization of the interface key function of human-computer interaction. The detection system is mainly responsible for the information acquisition of attitude sensor and data Kalman filter processing, and finally sent to the main control system through Bluetooth.[2].

The main control system is composed of single chip microcomputer, power supply, crystal oscillator circuit and reset circuit. The reset circuit is composed of a R5 grounding resistance with a resistance of 1K and a C3 capacitor with a capacitance of 10uF. The crystal oscillator is filtered. The detection system mainly collects the data of the inclination sensor, and then transmits it to the STC main control MCU through the serial port. Finally, the data is transmitted to the STC detection MCU through Bluetooth communication. The circuit diagram of the detection system is shown in the figure.

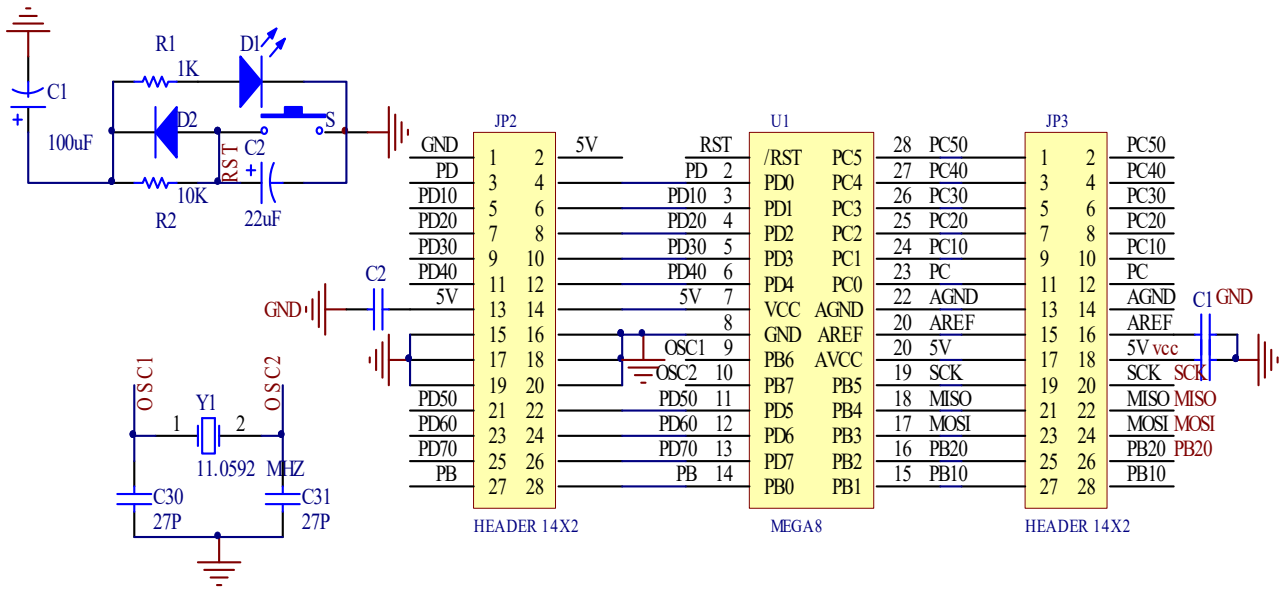

Figure 2. Circuit diagram of detection system

3.2 Motor Drive Module

The motor drive module selects ULN2003 driver, which can withstand high voltage and high stability, and can support a driver used by high-power motor. It has a current of up to 500mA and four white diodes. When receiving pulse control, the four diodes will flash corresponding to the change of pulse. The circuit diagram of motor driver is shown in the figure.

Volume 8 Issue 5, 2022
DOI: 10.6919/ICJE.202205_8(5).0072

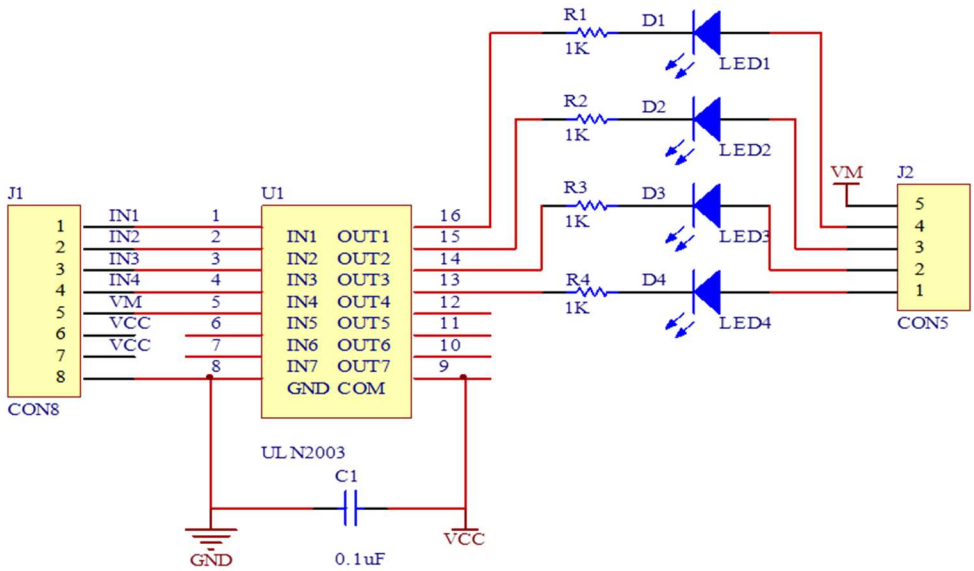

Figure 3. Motor driver circuit diagram

3.3 Detection Module

The detection module includes two parts: attitude detection and height detection. Adxl345 inclination sensor is used to detect the attitude change of the platform, and hy-srf05 ultrasonic sensor is used to detect the height change of the platform. The attitude change and height change are displayed on the serial port screen through Bluetooth transmission. The circuit diagram of the detection module is shown in the figure below.

3.4 Display Module

This design uses STC12 serial port screen, which is a simple, compact and convenient device to control the display of the system. In order to save the use of the keyboard. The serial port screen is connected with UART2 of STC MCU. The circuit diagram of the display module is shown in the figure below.

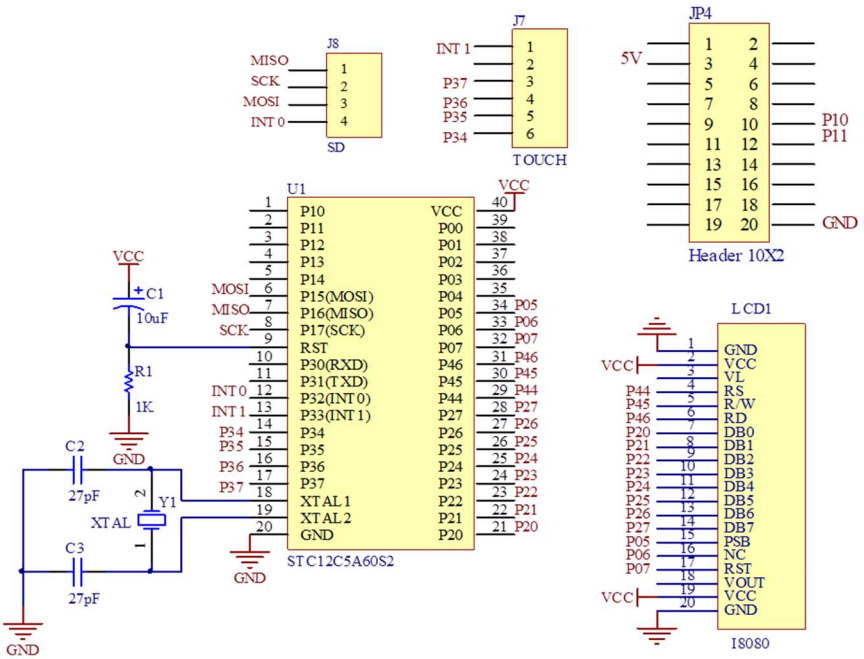

Figure 4. Circuit diagram of detection module and display module

ISSN: 2414-1895 DOI: 10.6919/ICJE.202205_8(5).0072

3.5 Bluetooth Module

Hc-05 Bluetooth serial communication module generally has two working modes, command response and automatic connection mode. In the automatic connection module, it can be divided into three roles: Master, slave and loopback. This design selects the automatic connection mode, one is the master and the other is the slave mode, binding the Bluetooth address.[3].

4. Software Design

The overall design of the system can be carried out step by step according to the module. It can be divided into Bluetooth data transmission module, attitude sensor data processing and acquisition module, motor control module and ultrasonic ranging module. The flow chart of self balancing system in this design is shown in the figure.[4].

1) Bluetooth data module: responsible for data handling of main control system and detection control system.

2) Attitude sensor module: collect attitude data, filter it, and then send it to the main control system.

3) Motor module: stepper motor control code, which controls the rotation angle of the motor and the speed of the motor.

4). Ultrasonic ranging module: detect the height change of the bearing instrument platform, and change its up and down movement by pressing the key, so as to finally realize the self balance of the system.

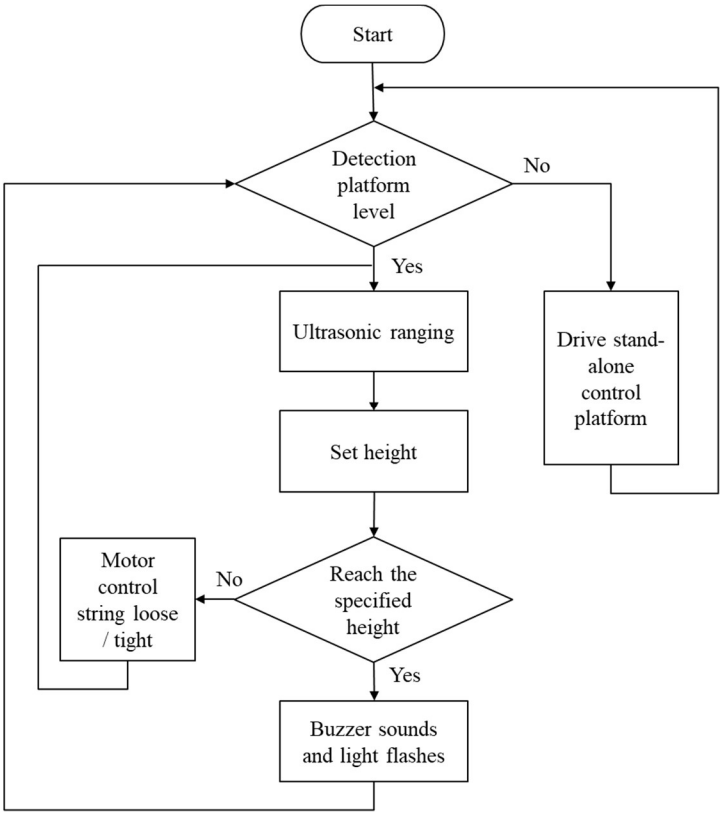

Figure 5. Flow chart of self-balancing system

5. Conclusion

According to the measured data, it can accurately display the angle and height of the platform, and the error with the set value is small, and the adjustment time is slightly longer, which basically meets the design requirements. The angle of the platform running test and the adjustment time of the platform are shown in the table below.

ISSN: 2414-1895 DOI: 10.6919/ICJE.202205_8(5).0072

Table 1. operation angle of platform

Frequency	Display height and angle	Serial port screen display	Angle	Error
1	Yes	15º	14.5º	3%
2	Yes	20º	19.7º	2%
3	Yes	30º	30.6º	4%

Table 2. adjustment time of platform

Frequency	Angle	Height	Time
1	5º	5cm	3s
2	10º	8cm	5s
3	15º	10cm	12s

References

[1] Abdurrahman Umar Tsani,Sukamto Pria,Sobarnas Mohamad Anas,Mujiarto. A Design for Self Balancing Scale Model Bicycle[J]. Journal of Physics: Conference Series,2021,1764(1).

[2] Saransh Jain,Mohit Makkar,Sarthak Jain,Deepak Unune. Modeling and Nonlinear Control of a Two-Wheeled Self Balancing Human Transporter[J]. Journal of Applied Nonlinear Dynamics,2021,10(1).

[3] Yang Yongming,Yu Chunfeng,Wang Yuanchao,Hua Nan,Kuang Haipeng. Imaging Attitude Control and Image Motion Compensation Residual Analysis Based on a Three-Axis Inertially Stabilized Platform[J]. Applied Sciences,2021,11(13).

[4] Yuki Shimizu,Satoshi Kataoka,Tatsuya Ishikawa,Yuan-Liu Chen,Xiuguo Chen,Hiraku Matsukuma,Wei Gao. A Liquid-Surface-Based Three-Axis Inclination Sensor for Measurement of Stage Tilt Motions[J]. Sensors,2018,18(2).