ISSN: 2414-1895 DOI: 10.6919/ICJE.202205_8(5).0070

Feasibility Study on Explosion-proof and Pressure-retaining Blast Furnace Bag Dust Removal

Zhejun Shu, Haojie Mu

Zenith Steel Group Company Limited (Nantong), Nantong, Jiangsu 226000, China

Abstract

The blast furnace gas produced in the blast furnace production process has a certain pressure energy and gas sensible heat. This part of the energy can be converted into mechanical energy by the turbine, but to recover this part of the energy, it is necessary to remove the dust in the gas, so we are here In the process, bag dust removal is added, but due to the large fluctuation of the blast furnace, it has a great impact on the bag dust removal. Improper operation of the bag dust removal can easily cause the pressure of the bag silo body to be too high, resulting in the explosion accident of the silo body, so we set up the silo body. The explosion-proof pressure maintaining device of the silo body solves this hidden danger well, and also reduces the waste of energy.

Keywords

Blast Furnace Gas; Bag Dust Removal; Warehouse; Explosion-proof Pressure Keeping.

1. Introduction

From the calculation of the material balance of the blast furnace, it can be seen that in the production process of the blast furnace, 1500~2000 m³ of gas will be produced for every 1 ton of iron produced. The blast furnace gas contains combustible gases CO and H2, and its calorific value is 2800 ~ 3800KJ/m³, which has a good use value. . However, part of the furnace dust escapes from the top of the furnace together with the gas. In order to meet the requirements of users, the gas must be dedusted before it can be used. In addition, high-pressure operation is generally adopted in current blast furnaces. The top gas residual pressure recovery turbine power generation device can recover gas pressure energy and gas sensible heat, convert this part of energy into mechanical energy through turbines, and drive generators to generate electricity. for electrical energy. This part of the energy is about 30% to 40% of the energy consumption of the blast furnace blower. While recovering energy, it can also improve gas quality and reduce noise pollution to the environment. [1].

To use gas, the dust content of clean gas should not be greater than 5mg/m3, and the purification of gas can be realized by gas dust removal system. The particle size of dust brought out by blast furnace gas is often 0 to 500 μm, and most of them are 200 to 500 μm. Different dust collectors can only remove dust in certain particle size ranges. In order to efficiently reduce the dust content in the gas to below 5mg/m3, it is advisable to use three-stage (coarse, semi-fine and fine) dust removal and a combination of various dust removal equipment in a step-by-step manner. At present, there are two types of blast furnace dust removal systems: wet method and dry method. Next, we will study the dry dust removal system.

Dry bag filter is a high-efficiency dust collector that uses various high-porosity woven fabrics or filter felts to capture dust particles in dust-laden gas. The capture mechanism mainly includes five kinds of inertial deposition of dust particles on the surface of the bag, interception of large particles (diameter greater than 1μm) by the bag, diffusion of fine particles (diameter less than 1μm), electrostatic attraction and gravity sedimentation. First, a primary layer is formed on the surface of the bag, and then the primary layer composed of dust collects dust particles to achieve fine dust removal. When

ISSN: 2414-1895 DOI: 10.6919/ICJE.202205_8(5).0070

the dust-collecting layer on the bag reaches a certain thickness, the resistance increases, and the dust-collecting layer needs to be removed by backflushing. The pressure difference before and after backflushing is often used to judge whether the primary layer is damaged. Since the primary layer is retained, the dust removal efficiency can be maintained at a high level. The bag filter generally has several boxes, which take turns to carry out dust removal and backflushing, which can ensure the continuous completion of the dust removal task, the dust removal efficiency can reach more than 99%, the resistance loss is less than 1000 ~ 3000Pa, and the dust content of the net gas can be reduced to Below 5mg/m3. [2].

2. Operation and Control of Bag Dust Removal System

The efficient operation of the blast furnace bag filter system depends on the control of the gas inlet temperature, the quality of the bag, and whether the backflushing system is working properly.

1) Gas temperature control

If the temperature of the gas entering the bag filter is too high, the bag is easy to burn; if the temperature is too low, the water in the gas will be separated out, which will block the bag, increase the gas resistance and reduce the dust removal efficiency. In order to prevent the gas temperature from being too high, the method of spraying water in the gravity precipitator is generally adopted. In principle, as long as the atomization effect of the water is good and the water quantity is properly controlled, the gas temperature can be controlled below the required temperature. At present, some blast furnaces use tubular heat exchangers to cool down. According to the temperature of gas, water or air can be used to cool down, and good results have been achieved. In order to prevent condensation on the cloth bag due to the low gas temperature, some blast furnaces are also equipped with gas heating devices. The upper and lower temperature limits of the gas entering the cloth bag are determined by the material of the cloth bag.

2) Cloth bag

The cloth bag used in blast furnace should have good heat resistance and corrosion resistance. At present, the filter cloth materials used for blast furnace gas dust removal mainly include glass fiber needled felt, flumes needle felt, nylon cloth bag, etc.

The metal fiber filter material is mainly stainless steel fiber, the temperature resistance can reach above 500~600℃, and it has good chemical resistance. The dust removal efficiency of the metal fiber filter material is as high as 99.99%, and the metal fiber can also be mixed with other fibers to make a temperature-resistant filter material. The metal fiber filter material can achieve the same filtration performance as the usual fabric filter material, with low resistance and easy cleaning, and also has anti-static, anti-radiation radiation properties, and has a longer life than ordinary cloth bags, but it is expensive and can only be used for special occasion.

P84 fibers have an irregular blade-like cross-section, which increases the surface area compared to ordinary circular cross-section fibers and thus has a stronger ability to capture dust. Moreover, the stress caused by the irregular fibers is different and unevenly distributed, which can make the fibers crimp and have strong cohesion and entanglement between each other. Pure P84 fiber has the advantages of high temperature resistance, high filtration wind speed, long service life, high dust removal efficiency, acid and alkali resistance, corrosion resistance, good chemical stability, etc., but the price is extremely high. Therefore, the composite fiber filter material with 5.5μm glass fiber as the main body and a certain proportion of P84 fiber combined with the advantages of the two fibers is currently the highest temperature resistance, the best performance and the cheapest high temperature filter on the market. Material. [3].

3) Blowback

In the process of bag filtration, dust continuously accumulates on the bag, the resistance loss increases, and the filtration efficiency decreases. At this time, backflushing is required. Backflushing should be carried out automatically or manually according to the resistance loss value. The methods of

ISSN: 2414-1895 DOI: 10.6919/ICJE.202205_8(5).0070

backflushing include diffuse backflushing, pressure regulating backflushing, pressurized backflushing and pulse backflushing. The first two have been rarely used due to the existence of gas waste or easy to cause pressure fluctuations in the furnace. At present, pressurized backflushing is generally used for large cloth bags, and pulse backflushing is used for small cloth bags. Generally, nitrogen gas of 0.4 ~ 0.6MPa is used as the power source. [4].

Errors in control or operation of any of the above can lead to a surge in system pressure, resulting in unpredictable accidents. Therefore, we need an explosion-proof and pressure-maintaining device for the bag dust removal chamber.

3. Explosion-proof Pressure Keeping of Bag Dust Collector

The blast furnace bag filter is a filter for blast furnace gas, and the internal pressure will change with the fluctuation of the blast furnace. When the pressure in the dust removal chamber continues to rise, it will cause the equipment or the chamber to burst, resulting in a large-scale uncontrollable gas leakage. At the same time, the filtered gas has a certain pressure and is a usable energy source, and all emissions are a waste of energy.

Therefore, we designed an explosion-proof and pressure-retaining device for the baghouse of blast furnace baghouse. For connection by welding, an electric butterfly valve is installed between the explosion-proof membrane and the branch pipe of the warehouse body. The valve is normally open, and an elbow is welded on the other side of the explosion-proof membrane. When the pressure of the warehouse body is higher than the set value, the explosion-proof membrane is pushed open to release the pressure. Due to the existence of the elbow, the released pressure will not damage the roof. When the pressure reaches the normal value, the electric butterfly valve will be closed remotely to keep the warehouse. body pressure.

The device is arranged on the top of the silo body, which can effectively discharge the pressure; the upper part is equipped with an elbow, which can prevent the discharged pressure from hitting the roof and damaging the roof.

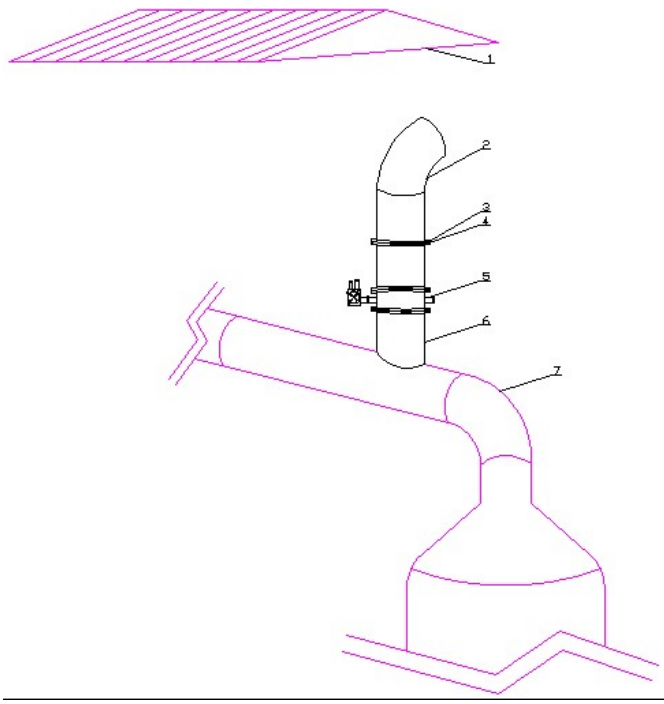

1. Roof 2. Elbow 3. Flange 4. Explosion-proof membrane 5. Electric butterfly valve 6. Spiral tube 7. Warehouse pipeline

Figure 1. Schematic diagram of explosion-proof pressure maintaining of bag dust removal chamber

ISSN: 2414-1895 DOI: 10.6919/ICJE.202205_8(5).0070

4. Conclusion

After the blast furnace gas is purified by the bag dust removal system, it has great utilization value. However, the control operation of the bag filter system is greatly affected by the fluctuation of the blast furnace. Once the operation error occurs, it may lead to a sudden increase in the system pressure, resulting in uncontrollable accidents. To solve this problem, compared with the prior art, the device can effectively prevent the bag filter chamber from bursting due to excessive pressure, causing equipment damage and large-scale gas leakage; at the same time, after the explosion-proof membrane bursts, the electric motor can be remotely shut down. The butterfly valve maintains the pressure of the warehouse, reduces the secondary damage caused by gas emissions, and reduces the waste of energy.

References

[1] Wang Ping. Ironmaking equipment. Beijing: Metallurgical Industry Press, 2002.

[2] Zhang Dianyin, Zhang Xueyi. Manual of Dust Removal Technology. Beijing: Metallurgical Industry Press, 2001.

[3] Xiang Xiaodong. Soot fiber filtration, theory, technology and application. Beijing: Metallurgical Industry Press, 2007.

[4] Jiang Fengyou. Industrial dust removal equipment. Beijing: Metallurgical Industry Press, 2007.