ISSN: 2414-1895 DOI: 10.6919/ICJE.202205_8(5).0061

Design of Digital Voltmeter based on Single Chip Microcomputer

Wenchao Jia[1, a], Heng Chen[1, b], Yuan Ji[1, c], Housheng Li[2, d]

[1] XiJing University, Xi'an 710123, China

[2] Zhengzhou University of Light Industry, Zhengzhou 450002, China

[a]1519164879@qq.com, [b]chenhenrys@qq.com, [c]2572457852@qq.com, [d]448859973@qq.com

Abstract

When we do electrical tests, we often need to measure the voltage of resistance, capacitance or other components to judge the quality of components, but the accuracy of measuring instruments is usually limited. To solve this problem, considering the characteristics of low voltage of components measured in general electrical experiments, this paper uses AT89C52 single chip microcomputer as the control platform to design a practical LCD display digital voltmeter. The A / D conversion and LCD display circuit are mainly designed. This digital voltmeter can measure the voltage value of components with high precision and has the characteristics of high sensitivity.

Keywords

Single Chip Microcomputer; A / D Conversion; LCD Display.

1. Introduction

At present, the electronic instrument industry and industrial control technology are developing continuously, and the accuracy of measured values is also improving in some actual production processes, which puts forward higher requirements for measuring instruments. Digital voltmeter is a technology that adapts to automation and computer. It can transform continuous analog signal into discontinuous digital signal and display it through display. The digital voltmeter designed by single chip microcomputer is different from the pointer voltmeter we use. The value detected by it is more accurate. It can also be used in some complex environments, and has strong expansibility.[1].

2. Overall Design and Principle of Voltmeter

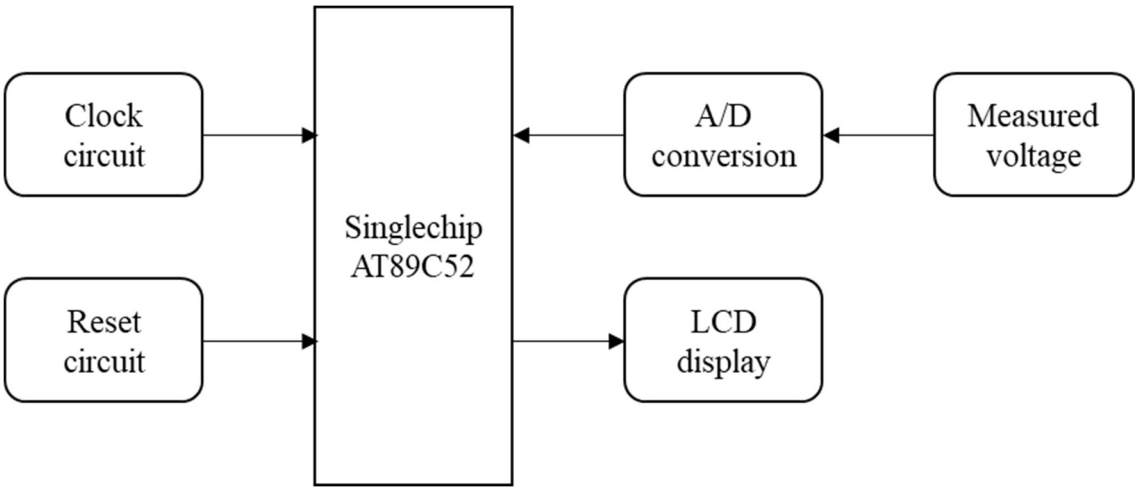

Figure 1. overall block diagram of circuit design

ISSN: 2414-1895 DOI: 10.6919/ICJE.202205_8(5).0061

This design takes the single chip microcomputer AT89C52 and ADC0808 converter as the main devices to automatically convert the analog voltage into digital voltage, and then use LCD1602 to display the converted voltage value. The measured voltage range is 0 ~ 20V, which can measure the output voltage of eight analog channels. The design principle is that the A / D conversion chip converts the analog voltage at the analog input channel into the corresponding digital voltage, and sends the converted data to the MCU through the data transmission port. The MCU receives and processes the data, and finally sends the processed data to the LCD for display.

3. Hardware Design

3.1 Single Chip Microcomputer AT89C52

AT89C52 is a CMOS 8-bit microcontroller. It can be driven by low voltage and has high performance. Main performance characteristics of AT89C52:

(1) Compatible with the instruction system related to MCS51, easy to operate;

(2) 32 bidirectional I / O ports;

(3) 256x8bit internal RAM;

(4) Wide clock frequency range;

(5) There are 2 serial port interrupts inside;

(6) There are 2 external interrupt ports, including 6 interrupt sources.

3.2 ADC0808 Converter

ADC0808 is an electronic component that can convert 8 channels and output 8 digits. Channel selection mainly depends on the change of address code, and different address codes correspond to different channels. ADC0808 converter has the following characteristics [2]:

(1) It has 8 input analog channels with a resolution of 8 bits.

(2) With switching start stop control terminal.

(3) Single + 5V power supply.

(4) The working environment is relatively wide, and the temperature range that can be withstood is relatively large.

3.3 LCD1602

The controller used by LCD1602 LCD display module is HD44780. It contains relatively simple instructions, but more functions. Common character movement, continuous flashing and other functions can be realized. It is often used in circuits with rich display content, including Chinese characters, English and string. Its display effect is good, and it is often used in some other displays.

4. System Design

First, collect the measured voltage, convert the analog voltage into digital through the A / D conversion module, and judge whether the voltage value reaches the previous predetermined value through a comparison program. If the voltage value is greater than the predetermined value, turn on the LED lamp, which is equivalent to a simple alarm device, Then, the current measured voltage value and the selected analog channel number are displayed on the LCD display. A single step continuous key is set in the circuit, which can be cycled again through the reset key during the cycle. When the reset key is normally closed, the voltage of the channel can be measured repeatedly.[3].

Volume 8 Issue 5, 2022
DOI: 10.6919/ICJE.202205_8(5).0061

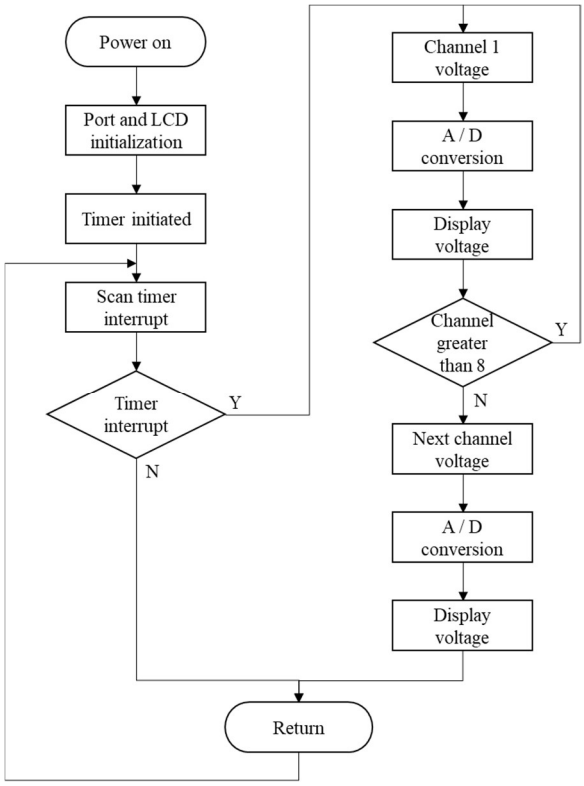

Figure 2. main program flow chart

5. Simulation Debugging

The schematic diagram includes input module, display module, conversion module, alarm device and reset key. The specific simulation circuit diagram is shown in the following figure:

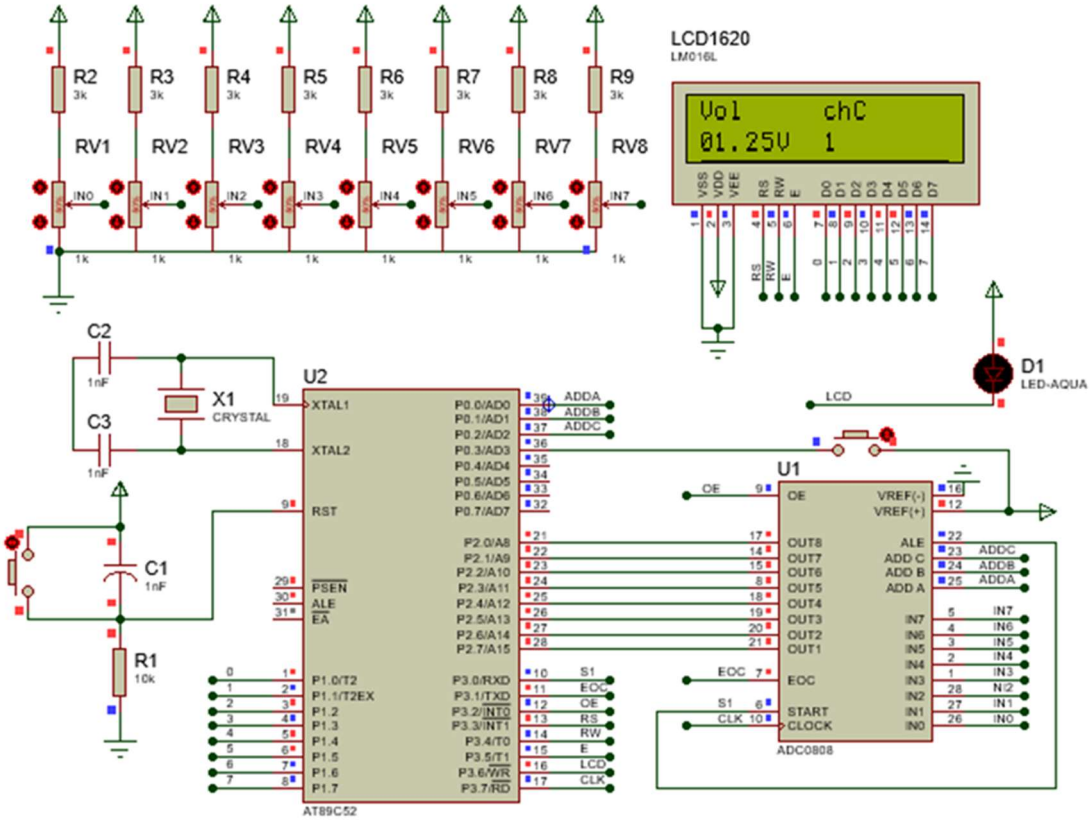

Figure 3. overall simulation diagram

ISSN: 2414-1895 DOI: 10.6919/ICJE.202205_8(5).0061

6. Conclusion

This paper designs the digital voltmeter. Through simulation, the voltage display is realized. The future development trend of digital instrument is more intelligent, because its accuracy is higher and higher, the automation of measurement technology will be more and more comprehensive, and the scalability will be better and better.

References

[1] Rick Bush. Digital Voltmeter/Phaser[J]. Transmission & Distribution World: The Information Leader Serving the Worldwide Power-Delivery Industry,2016,68(9).

[2] Denso Corporation; Patent Issued for D/A Conversion Circuit, Quantization Circuit, And A/D Conversion Circuit (USPTO 10,735,016)[J]. Journal of Transportation,2020.

[3] Wei Wang. Design of Digital Control DC Voltage Source Based on AT89C52 MCU[J]. Applied Mechanics and Materials,2014,2935(484-485).