ISSN: 2414-1895 DOI: 10.6919/ICJE.202205_8(5).0004

Application of Magnetoelectric Sensor in Automobile

Yuechao Sun

School of Mechanical and Electrical Engineering, Lingnan Normal University, Zhanjiang 524048, Guangdong, China

*Email: yuechaosun@sina.com

Abstract

Magneto-electric sensor is one of the sensors widely used in the field of measurement. It is also known as the electrodynamic sensor or electromagnetic induction sensor, it is the use of magneto-electric effect will be measured into electrical signals of the sensor, a generation of sensors, it USES the principle of electromagnetic induction. Magneto-electric sensors generally convert speed into induced electromotive force output. Magneto-electric sensor has many kinds, and magneto-electric speed sensor, because of its simple structure, small volume, no power, can be directly from the object being measured mechanical energy into electrical signal output, has strong anti-interference ability, the advantages of wide scope of heat-resistant, commonly used in electronically controlled engine to determine the speed and position of the crankshaft.

Keywords

Magnetoelectric; Sensor; Construction; Application.

1. Introduction

With the continuous progress of science and technology, information technology has played a decisive role in social development and scientific progress. The foundation of information technology includes information collection, information transmission and information processing, and information collection is inseparable from sensor technology.

Magneto-electric sensor does not need to use external power supply, has stable performance and simple circuit, small output impedance, and in the range of frequency response, suitable for measuring torque, speed and vibration, but its size and weight are relatively large.

Magnetoelectric sensors have extensive applications in the field of displacement and speed and position testing, and can be used as components for precision test instruments, such as the expansion, elongation and strain of test parts.In addition on the car magnetoelectric sensor is also widely used sensor, so for the research of sensor is more and more important, this paper discusses the working principle of magnetoelectric sensor, basic structure, measuring circuit and its application in cars, aims to help us use the knowledge of the sensor to better understand the automotive technology performance.

2. Magnetoelectric Sensor

Magnetoelectric sensor uses the principle of electromagnetic induction to convert the motion speed of the input into the induction potential output in the coil.It directly converts the mechanical energy of the measured object into an electrical signal output, working without an external power supply, and is a typical passive sensor.Due to the large output power of this sensor, the allocated secondary instrument circuit is greatly simplified.

ISSN: 2414-1895 DOI: 10.6919/ICJE.202205_8(5).0004

2.1 Principle of Magnetoelectric Sensor

Magnetoelectric sensors, also known as electric power sensors, turn changes in the measured physics into an induced electromotive force.According to its different working principle, it can be divided into constant magnetic flux type and variable magnetic flux type.General magnetoelectric sensors are divided into magnetoelectric induction type and Hall type.Magto-electric sensor consists of coil, permanent magnetic steel and iron core.The velocity of the coil movement relative to the magnetic field is expressed by either the angular velocity or the v velocity, then the resulting induced electromotive force e is: [1].

$$e = NBLV \qquad \text{or} \qquad e = NBS\omega \tag{1}$$

In the formula: N represents the number of coil turns; B represents the induction strength of the coil in the magnetic field, L represents the average length of the coil, and S represents the average cross-sectional area of the coil.After determining the value of structural parameters in the sensor, L, N, S and B are fixed values, and e is proportional, so this kind of sensor is in the form of magneto-electric speed sensor, which can directly measure the angular velocity and linear velocity.If a differential or integral circuit is connected in the measured circuit, the acceleration and displacement can be measured.In this way, the magnetoelectric speed sensor can be used in the dynamic measurement.

2.2 Type of Magnetoelectric Sensor

According to the working principle, the magnetoelectric sensor can be divided into two types: constant magnetic flux type and magnetoresistance variation type.

2.2.1 Sensor of Constant Magnetic Flux

The working magnetic field of the constant flux sensor is constant, and the relative motion (the moving coil or the magnet) is generated. Cut the magnetic field line to produce the induction electromotive potential, which is to use the relative motion between the coil and the magnet to produce the induction electric potential. The structure is shown in Figure 1. [2].

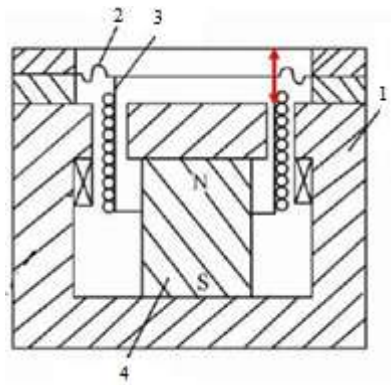

1-Metal skeleton 2-spring 3-coil 4-permanent magnet

Figure 1. Structure of constant magnetic flux sensor

The coil in the moving coil magneto sensor is the motion part, the basic form is the speed sensor, can directly measure the line speed or angular speed, if the integral circuit or differential circuit, then can also be used to measure displacement or acceleration; the motion part of the moving iron magneto induction sensor is the core, can use vibration and acceleration measurement. [6].

2.2.2 Sensor of Magnetoresistance Change

The coil and magnet of the magnetoresistance change sensor do not make relative motion. the movement of the object made of magnetic conductive material changes the magnetoresistance of the

ISSN: 2414-1895 DOI: 10.6919/ICJE.202205_8(5).0004

magnetic road, thus causing the enhancement or weakening of the magnetic line, so that the coil produces induced electromotive force.The permanent magnet and coil are fixed, the movement of the moving core makes the air gap and magnetic magnetic resistance change, causing the magnetic flux change and the induction potential in the coil, so it is also called the variable magnetoresistance structure.The structure is shown in Figure 2.

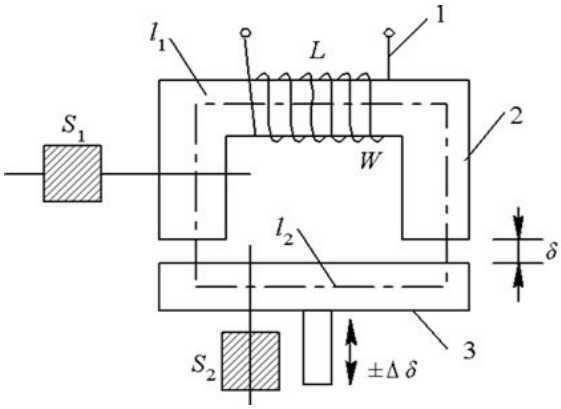

1-Coil 2-Iron core 3-Armature

Figure 2. Structure of magnetoresistive variable sensor

3. Application of Magnetoelectric Sensor

3.1 Sensorr of Magneticelectric Revolution Speed

The working principle of magneto-electric speed sensor is shown in FIG. 3. On the shaft requiring test speed, install a gear (excitation parts made of magnetic conductive material, can be other forms, such as spline, disc with hole), the gear and the shaft rigid connection, synchronous rotation, the rotation speed of the gear is equal to the rotation speed of the detection shaft.In FIG. 3, when the excitation member is a gear, then the end surface of the magnetoelectric speed sensor generates a pulse signal and detects the gear speed by detecting the number of pulses.The number of gears is Z and the speed n is r/min; the end of the sensor is nZ (nZ / second is nZ / 60), or the speed sensor changes n Z / 60 times per second.If the AC frequency and the number of teeth are known, the speed n is 60f / Z. [3].

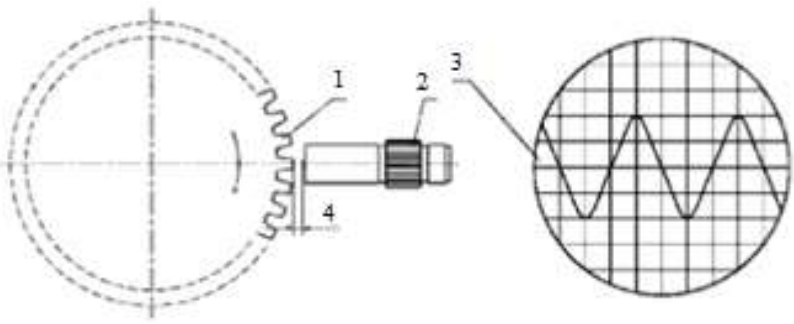

1-gear teeth 2-sensor 3-oscilloscope 4-air gap

Figure 3. Working principle of magnetoelectric speed sensor

In the specific application aspect, the magneto-electric speed sensor connected with a appropriate digital circuit, can form a digital speed meter, can directly read the speed of the measured meter on the object. Engine speed is one of the most important parameters of the engine, some basic engine experiments with its speed as the basic variable.It is therefore useful to measure the rotational speed simply and effectively, and to provide the engine crankshaft position signal.

ISSN: 2414-1895 DOI: 10.6919/ICJE.202205_8(5).0004

3.2 Sensorr of Magneticelectric Wheel Speed

3.2.1 Structure of Magnetoelectric Wheel Speed Sensor

Car wheel speed sensors are usually installed at the wheels, but on some models in the main reducer or transmission. Magnetic and electric wheel speed sensor is generally composed of magnetic induction element and tooth ring, magnetic induction element is composed of permanent magnet, pole axis, induction coil and so on.The tooth ring is a moving part, generally mounted on the hub or wheel shaft to rotate with the wheel.The wheel speed induction element is a stationary component with a certain gap between the induction magnetic pole and the end surface of the tooth ring, as shown in Figure 4.

According to the different shape, the pole axis is divided into three types: chisel, column and diamond.Different shapes of the magnetic induction elements are installed differently relative to the tooth ring.The diamond shaft speed sensor is mounted radially perpendicular to the gear; the chisel shaft speed sensor is mounted axially cut to the gear; and the column shaft speed sensor is mounted axally perpendicular to the gear.Installation shall be firmly, to avoid water and dust on the operation of the sensor, grease before installation. [4].

3.2.2 Principle of Magnetoelectric Wheel Speed Sensor

The magnetic-electric wheel speed sensor is composed of a permanent magnet core and a coil.The magnetic line emerges from one pole of the core through the ring and air and back to the other pole of the core.Because the sensor coils are around the core, these magnetic lines also pass through the coil.When the wheel rotates, the tooth ring (rotor) synchronized with the wheel rotates accordingly, and the teeth and gap on the tooth ring quickly pass through the magnetic field of the sensor in turn. The result is that the magnetic resistance of the magnetic road is changed, which leads to the change of the induction potential in the coil, producing a potential pulse of certain amplitude and frequency.The frequency of the pulses, the number of pulses generated per second, reflects the speed of the wheel rotation, as shown in Figure 4.

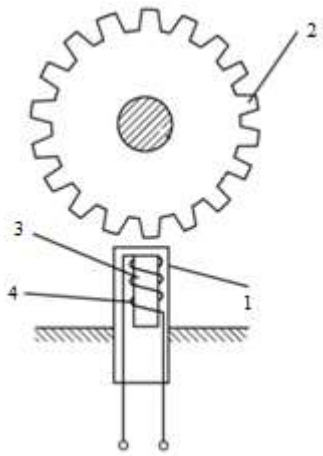

1-sensor 2-Rotary wheel 3-permanent magnet 4-pcoil

Figure 4. Basic principle of magnetoelectric wheel speed sensor

When the air gap of the tooth coil is opposite to the magnetic end of the sensor, and the magnetic end of the sensor, the magnetic field around the induction coil is strong.During the driving of the car, the top and gash on the tooth ring alternate through the magnetic field of the permanent magnet, and the magnetic flux in the whole circuit changes accordingly, creating an induced electromotive force in the coil.The induced electromotive force can be calculated by detecting the waveform signal of the potential. [5].

ISSN: 2414-1895 DOI: 10.6919/ICJE.202205_8(5).0004

Magneelectric wheel speed sensor is simple structure, low cost, stable and reliable work, almost unaffected by environmental factors such as temperature and dust.It is widely used in the ABS antilock braking system of Hyundai sedan.The output of the wheel speed sensor depends on the magnetic field change in the coil, so it is proportional to the measured speed.When the wheel speed is higher, the greater the electric momentum is, and vice versa, when the wheel speed is lower, the smaller the electric momentum is.If the speed is too low, the output electromomentum is so small that it cannot be measured.Therefore, the magneto-electric wheel speed sensor generally has a lower limit operating frequency, generally 50Hz.For a car, when the car speed is too low, because the magnetoelectric wheel speed sensor cannot output the effective signal, and the electronic control unit ECU cannot collect the specific voltage, the anti-lock system ABS will not work normally, which will affect the safety of assisted driving of the car.

3.3 Hall Sensor

The Hall sensor is also a magnetoelectric sensor.It is a sensor that converthe measurement to electromotive force output using Hall elements based on the principle of Hall effect.The Hall element has the unique ability to feel the magnetic field at rest, and has the characteristics of simple structure, small volume, small noise, wide frequency range, large dynamic range and long life.

Hall sensor principle: a metal or semiconductor sheet is placed in a magnetic field. When a current flows through it, the electromotive force is generated perpendicular to the current and the magnetic field. This physical phenomenon is called the Hall effect.The Hall effect principle is shown in Figure 5:

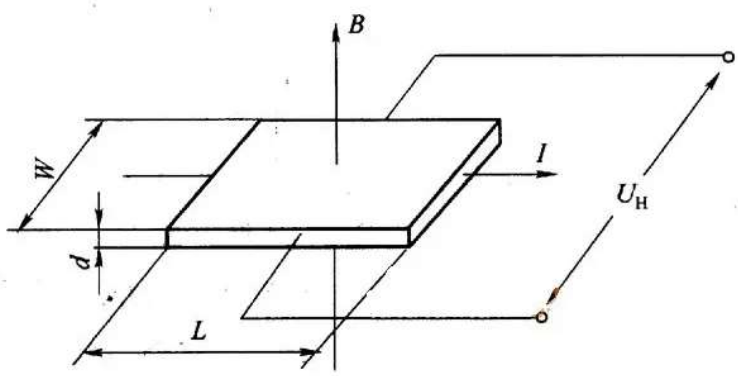

Figure 5. Hall effect schematic

The Hall potential can be expressed in the following equation:

$$U_H = \mathrm{R_H}\frac{\mathrm{IB}}{\mathrm{d}} = \mathrm{k_H IB} \tag{2}$$

According to the Hall principle, the output voltage U of the Hall sensor has nothing to do with the motion speed of the measured object, so its high and low speed characteristics are very good. If the rotational speed of the object is measured, the lower limit speed can be close to 0, and the upper limit speed is theoretically not limited, that is, it can meet the measurement of various running speed in the project.Therefore, most of the speed sensors on the car use Hall sensors.Because the magneto-electric wheel speed sensor is simple and low cost, the amplitude of its output signal changes with the speed.If the speed is too slow, the output signal is below 1V, the electronic control unit cannot detect; and the response frequency is not high.When the speed is too high, the frequency response of the sensor can not keep up, and the electromagnetic wave interference ability is also poor.At present, the control speed range of ABS systems at home and abroad is generally 15 km/h ~ 160 km/h, and in the future,

ISSN: 2414-1895 DOI: 10.6919/ICJE.202205_8(5).0004

the control speed range is required to expand to 8 km/h~260 km / h or larger, obviously magneto-electric wheel speed sensor is difficult to adapt [6].The speed output signal voltage amplitude is not affected by the rotation speed, its response frequency can be up to 20 kHz, its anti-electromagnetic wave interference ability is strong.In addition, the Hall sensors have analog and digital sensors, as well as switch sensors.The Hall sensor used by automobile throttle position sensor and automobile acceleration position sensor output is analog signal, so the output signal is determined by the controlled device, while the Hall sensor used by camshaft position sensor and crankshaft position sensor is digital.The application position of the digital Hall sensor includes the camshaft position sensor, the crankshaft position sensor, and the vehicle speed sensor.

4. Conclusion

Due to the important role of automobile sensors in the automotive electronic control system and the increasing market demand, countries around the world attach great importance to the theoretical research of sensors, the application of new materials and the development of new products.The future automotive sensor technology, functional, intelligent, miniaturization will be a new way of automotive sensor development.Magnetoelectric sensors will also be widely used in improving the performance of the car, will be toward the multi-functional, intelligent, miniaturization technology direction development.In addition, because of its characteristics, it will also be widely used in the construction, industry, aerospace and other fields of vibration, speed, angle, magnetic field parameters and other measurement.

References

[1] SONG Kai, WANG Chao, CHEN Tao, ZHOU Ze, The whole process optimization method for the anti-concave of body covering based on variable working condition.Mechanical science and technology. 2015, 34(04):599-602.

[2] WANG Zhi-wang, Dynamic characteristics and signal processing of ABS Magneto-electric wheel speed sensor. 2006: 07.

[3] LU Chang-gen,ZHOU You-jia.Design and application of magneto-electric speed sensor.Locomotive electric drive .2008(05): 50.

[4] SHEN Chang-shen, Common electronic components of directions for use.Beijing, People's Posts and Telecommunications Press,2003.

[5] YANG Ying-jie, Research and application of wheel speed sensor. Automotive technology, 2019(03):30.

[6] WEI Dong-zhi, ZHANG Mei-hong, A brief discussion on the differences between magnetoelectric and Hall speed sensors in automobiles.Friends of the science, 2007(07): 51.

[7] Hakimitoroghi N, Raut R, Mirshafiei M, et al. An Analog Circuit Technique to Improve a Geophone Frequency Response for Application as Vibration Sensors[C].2020 IEEE International Symposium on Circuits and Systems (ISCAS). IEEE, 2020: 1-4.