ISSN: 2414-1895 DOI: 10.6919/ICJE.202205_8(5).0041

Transient Stability Assessment of Power System based on ISSA-ELM

Xiuci Li[a], Jianmei Xiao[b]

Shanghai Maritime University, Shanghai 201306, China

[a]767298706@qq.com, [b]jmxiao@shmtu.edu.cn

Abstract

One of the prerequisites for the stable operation of the power system is to ensure the transient stability of the power system. At present, many intelligent algorithms are applied to the transient stability assessment of power systems, but there are still some problems, such as poor effectiveness and low accuracy due to huge data. Aiming at these problems, this paper uses the information entropy-based rough set for attribute dimensionality reduction, filters unnecessary attributes, and obtains a simplified data set. Since the prediction accuracy of the traditional extreme learning machine is not very high, this paper adopts the improved sparrow algorithm to optimize the extreme learning machine, and obtains a high accuracy. Finally, the IEEE39 system simulation results show that the method proposed in this paper can effectively reduce the data dimension, and can quickly and accurately discriminate the transient and stable state of the power system.

Keywords

Transient Stability Assessment; Sparrow Algorithm; Extreme Learning Machine; Rough Set.

1. Introduction

With the revolution of science and technology and the development of production and life, people's demand for electricity is increasing day by day, and the power system also develops. The current rapid expansion of the power grid brings convenience to people's lives. At the same time, there are calculations in the transient stability assessment of the power system. high volume and low evaluation efficiency.

In response to the above problems, researchers and scholars at home and abroad have proposed many corresponding improvement methods. Common methods are Deep Belief Networks, Support Vector Machine [1], Random Forest [2], Artificial Neural Network and Decision Tree [3-4] et al. Reference [5] relies on the Stacking meta-learning strategy for evaluation. Reference [6] selects DBN to evaluate the transient stability of power systems. Compared with traditional machine learning algorithms, the numerical accuracy of the evaluation results is improved. References [7-8] all use deep learning methods to evaluate the transient stability of power systems, and have achieved good experimental results. Reference [9] and Reference [10] use multi-support vector machine synthesis, support vector machine comprehensive classification model and key sample sets respectively for evaluation, which greatly reduces the misjudgment as stable.

The current methods all have certain advantages and effectiveness, but there are still slight deficiencies. Based on the above analysis and research, this paper proposes to use the improved sparrow algorithm to optimize the kernel extreme learning machine, so as to evaluate the transient stability of the power system, and charge the power system.

ISSN: 2414-1895 DOI: 10.6919/ICJE.202205_8(5).0041

Considering the increase of computation and the decrease of accuracy due to data redundancy, the attribute set is effectively reduced by rough set before evaluation.

2. Sparrow Search Algorithm(SSA)

2.1 The Basic Theory of Sparrow Search Algorithm

Sparrow Search Algorithm is a new type of optimization algorithm, which was first proposed by Xue Jiankai et al. [11] in 2020. They were inspired by the foraging behavior and anti-predation behavior of sparrow populations, and derived such an algorithm. A new swarm intelligence optimization algorithm. Compared with the traditional swarm intelligence optimization algorithm, the sparrow search algorithm has better robustness, optimization and convergence.

Sparrows are gregarious creatures and usually do not go out to hunt alone. When they go out to hunt in groups, they will be divided into three categories and assume three roles: finder, joiner and vigilant. The proportion of discoverers and joiners in the population remains unchanged, and the number of discoverers is greater than the number of joiners. The finder team is responsible for finding food and locating the area where the food is located. The sparrows at the outermost periphery of the entire population act as guards. Once danger occurs, the guards send an alarm signal, and all the sparrows go to the safe area and continue to look for food in the safe area. During the whole process of searching for food, the joiner keeps staring at the finder. When the finder finds the food, the joiner immediately competes with the finder for food. If the result of the competition, it means that the joiner's position is updated.

Assuming that the sparrow population is n, the entire population is expressed as:

$$X = \begin{matrix} x_{1,1} & x_{1,2} & \cdots & x_{1,d} \\ x_{2,1} & x_{2,2} & \cdots & x_{2,d} \\ \vdots & \vdots & & \vdots \\ x_{n,2} & x_{n,2} & \cdots & x_{n,d} \end{matrix} \tag{1}$$

Among them, d represents the dimension of the problem to be optimized.

Finder position update formula:

$$x_{i,p}^{k+1} = \begin{cases} x_{i,p}^{k} \cdot e^{-\frac{i}{\alpha \times iter_{max}}} \ , R_2 < ST \\ x_{i,p}^{k} + Q \times L \ , R_2 \geq ST \end{cases} \tag{2}$$

Among them, $p = 1,2,\cdots,d$; $x_{i,p}^{k}$ represents the specific position of the i-th sparrow in the p-th dimension in the k-th iteration; $iter_{max}$ represents the maximum number of iterations set; $\alpha \in (0,1]$; $Q \sim N(0,1)$; $L = [1,1,\cdots,1]_{1\times d}^{\mathrm{T}}$; R_2, ST represent alarm value and safety value, $R_2 < ST$ means that the foraging area is not dangerous, and $R_2 \gg ST$ means that the foraging area is dangerous and the location needs to be updated.

The joiner's location update formula:

$$x_{i,p}^{k+1} = \begin{cases} Q \cdot e^{\frac{x_{worst}{}_{p}^{k} - x_{i,p}^{k}}{\alpha \times T}} & , i > \frac{n}{2} \\ x_{best}{}_{p}^{k+1} + \left| x_{i,p}^{k} - x_{best}{}_{p}^{k+1} \right| \times A^{+} \times L \ , \text{otherwise} \end{cases} \tag{3}$$

ISSN: 2414-1895 DOI: 10.6919/ICJE.202205_8(5).0041

Among them, ${x_{worst}}_p^k$ represents the most dangerous position in the k-th iteration, ${x_{best}}_p^k$ represents the best position in the k-th iteration; $A^+ = A^{\mathrm{T}}(AA^{\mathrm{T}})^{-1}$and A is a $1 \times d$ matrix.
The position update formula of the vigilante:

$$x_{i,p}^{k+1} = \begin{cases} {x_{best}}^{k+1} + \beta(x_{i,p}^k - {x_{best}}^k), f_i > f_b \\ x_{i,p}^k + \lambda\left(\frac{\left|x_{i,p}^k - x\omega_p^{k+1}\right|}{(f_i - f_\omega) + \varepsilon}\right) \quad , f_i = f_b \end{cases} \tag{4}$$

Among them, f represents the fitness function of the sparrow algorithm. When the fitness function value is low, it means that there is a lack of food there, and it is necessary to change the location to find food. f_i, f_ω and f_b represent the fitness function, the worst fitness function value and the best fitness function value of the ith sparrow respectively; ${x_{best}}^k$ indicates the best position of the current population in the whole area.Parameter:β follow the standard normal distribution; $\lambda \in [-1,1]$; ε is extremely small, and the function is to prevent the denominator from being 0.

2.2 Sparrow Search Algorithm Process

Step 1: Population initialization. Set the sparrow population n, the number of discoverers, the number of joiners and the number of alerters, $iter_{max}$, R_2, ST.

Step 2: Calculate the corresponding fitness value of each sparrow, and find f_ω and f_b; for the sparrow with better fitness value, select a certain proportion of them to act as discoverers, and the remaining sparrows act as joiners.

Step 3: Use 3 position update formulas, if the new fitness function value of a sparrow is better than the previous step, then update the position of the sparrow;

Step 4: Iterate, repeat Step 3 until the maximum number of iterations is reached, and find the sparrow with the best fitness function.

2.3 Improved Sparrow Search Algorithm

In the classic sparrow search algorithm, in the middle and late stages, the population diversity is likely to decre ase, and it is easy to fall into the local optimum [12], resulting in insufficient search accuracy of the algorithm. Therefore, the adaptive t-distribution is added in this paper to enrich the diversity of the population, and the t-distribution is adapted according to the change of the number of iterations, so as to avoid the situation that the sparrow search algorithm falls into the local optimum and improve the search ability.

The probability density function of the t-distribution:

$$p(y) = \frac{\Gamma\left(\frac{n+1}{2}\right)}{\sqrt{n\pi}\,\Gamma\left(\frac{n}{2}\right)}\left(1 + \frac{y^2}{n}\right)^{-\frac{n+1}{2}} \quad , -\infty < y < \infty \tag{5}$$

Among them n is the degree of freedom.

Improved location formula:

$$x_{t,i} = x_i + x_i \times t(I_{\mathrm{iter}}) \tag{6}$$

Among them, $x_{t,j}$ is the updated position of the i-th sparrow, x_i is the original position of the i-th sparrow, and $t(I_{\mathrm{iter}})$ is the t-distribution.

ISSN: 2414-1895 DOI: 10.6919/ICJE.202205_8(5).0041

3. Extreme Learning Machine(ELM)

Extreme Learning Machine was first proposed in 2004 by Guang-Bin Huang, Qin-Yu Zhu and Chee-Kheong Siew et al. [13]. Among the machine learning algorithms with tutors, ELM is more efficient than general support vector machines and neural networks such as BP. It is more generalizable and has higher learning efficiency.

The extreme learning machine belongs to the feedforward neural network, which includes a three-layer structure of input layer, hidden layer and output layer. Its structure is shown in Figure 1.

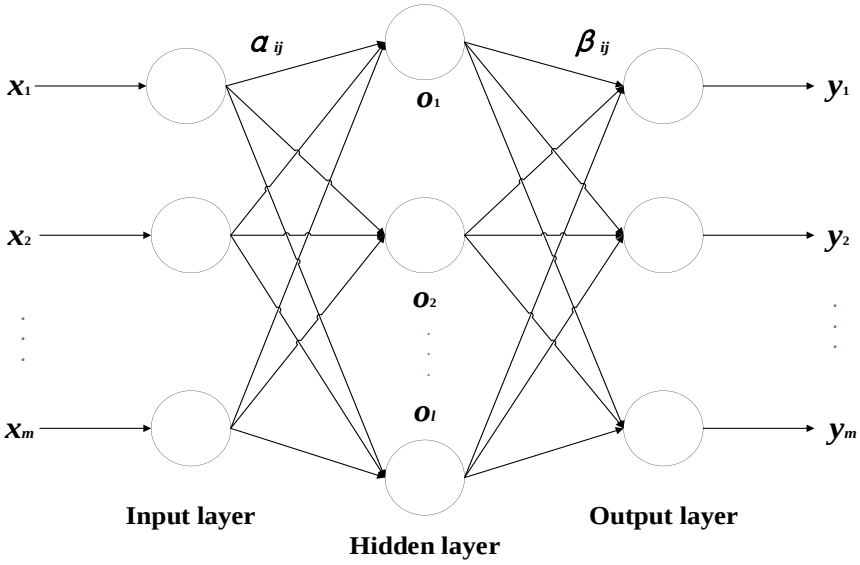

Figure 1. ELM structure

The input layer has m neurons, the output layer has n neurons, and the hidden layer has l neurons. The input and output are respectively $x = [x_1, x_2, \cdots, x_m]^{\mathrm{T}}$ and $y = [y_1, y_2, \cdots, y_n]^{\mathrm{T}}$ $x_i \in R^m, y_i \in R^n$.

The weight α_{ij} between the input layer and the hidden layer is expressed as:

$$\alpha_{ij} = \begin{bmatrix} \alpha_{11} & \alpha_{12} & \cdots & \alpha_{1m} \\ \alpha_{21} & \alpha_{22} & \cdots & \alpha_{2m} \\ \vdots & \vdots & & \vdots \\ \alpha_{l1} & \alpha_{l2} & \cdots & \alpha_{lm} \end{bmatrix} \tag{7}$$

The weight β_{ij} between the hidden layer and the output layer is expressed as:

$$\beta_{ij} = \begin{bmatrix} \beta_{11} & \beta_{12} & \cdots & \beta_{1n} \\ \beta_{21} & \beta_{22} & \cdots & \beta_{2n} \\ \vdots & \vdots & & \vdots \\ \beta_{l1} & \beta_{l2} & \cdots & \beta_{ln} \end{bmatrix} \tag{8}$$

The hidden layer neuron threshold b is expressed as:

$$b = [b_1, b_2, \cdots b_l]^{\mathrm{T}} \tag{9}$$

ISSN: 2414-1895 DOI: 10.6919/ICJE.202205_8(5).0041

The activation function of the hidden layer neurons is set to $g(x)$, then the expression of the ideal output T is:

$$T = [t_1, t_2, \cdots t_n]^{\mathrm{T}} \tag{10}$$

$$t_i = [t_{i1}, t_{i2}, \cdots, t_{in}]^{\mathrm{T}} = \begin{bmatrix} \sum_{i=1}^{l} \beta_{i1} g(\alpha_i x_j + b_i) \\ \sum_{i=1}^{l} \beta_{i2} g(\alpha_i x_j + b_i) \\ \cdots \\ \sum_{i=1}^{l} \beta_{in} g(\alpha_i x_j + b_i) \end{bmatrix}, (i = 1,2,\cdots,l \quad j = 1,2,\cdots,m) \tag{11}$$

$$H = \begin{bmatrix} g(\alpha_1 x_1 + b_1) & g(\alpha_2 x_1 + b_2) & \cdots & g(\alpha_l x_1 + b_l) \\ g(\alpha_1 x_2 + b_1) & g(\alpha_2 x_2 + b_2) & \cdots & g(\alpha_l x_2 + b_l) \\ \vdots & & & \\ g(\alpha_1 x_m + b_1) & g(\alpha_2 x_m + b_2) & \cdots & g(\alpha_l x_m + b_l) \end{bmatrix} \tag{12}$$

Among them, H represents the output of the hidden layer in the ELM.

Finally, the least squares method is used to calculate β and output β.

4. Extreme Learning Machine based on SSA

Since the ELM is running, the output weights and output thresholds are easily affected by the randomly generated input weights and input thresholds, and there are certain randomness and instability. Therefore, ISSA is used to find the best weights and thresholds for ELM to reduce randomness. The specific flow of its algorithm is shown in Figure 2.

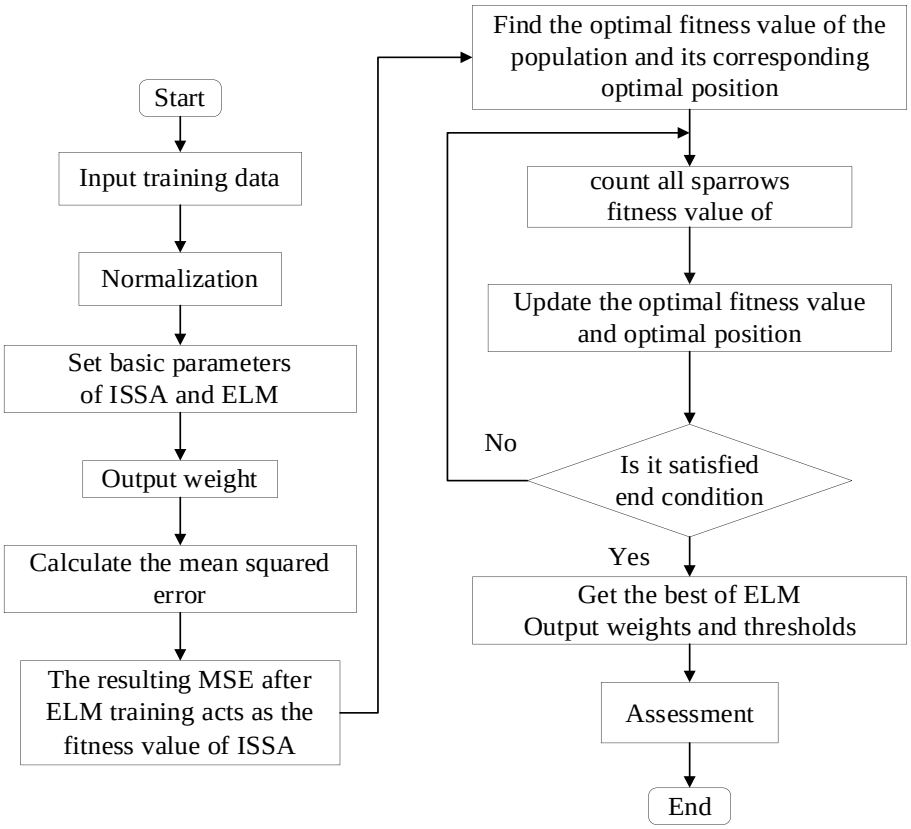

Figure 2. ISSA-ELM flow chart

ISSN: 2414-1895 DOI: 10.6919/ICJE.202205_8(5).0041

5. Power System Transient Stability Assessment

5.1 Feature Attribute Selection

The evaluation method used in this paper is data-oriented, so the New England 10-machine 39-node system (IEEE39) is selected for data collection. The system model diagram is shown in Figure 3. The IEEE39 system model is built through Matlab/Simulink, and the required data set is obtained through simulation.

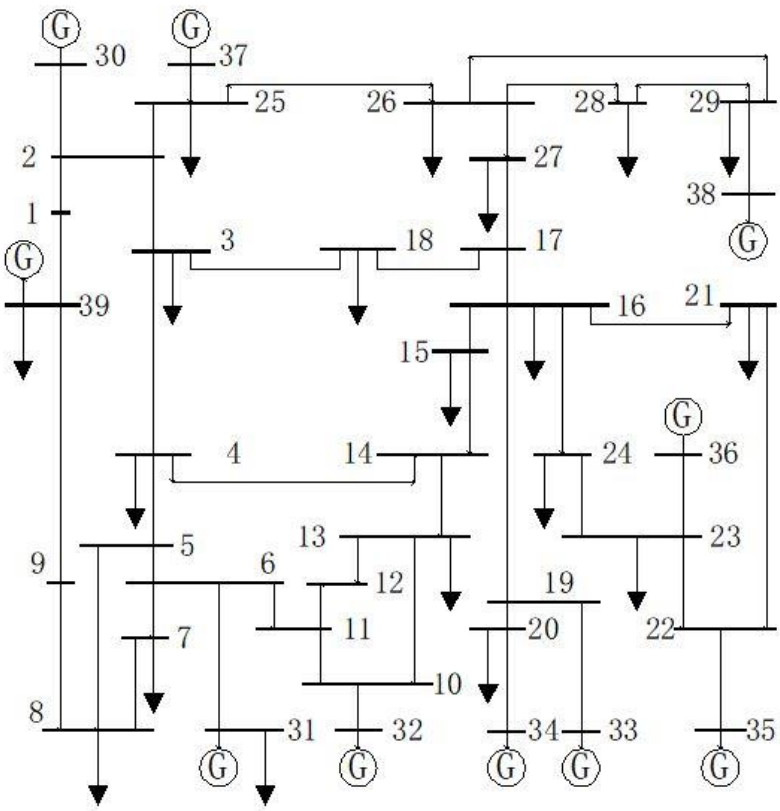

Figure 3. IEEE39 model diagram

Before the transient stability assessment of the power system, the attribute value must be selected first. Whether the attribute selection is reasonable is related to the scientificity and accuracy of the transient stability assessment. Combined with the transient mechanism of the power system and the experience of related transient stability assessment methods [15-17], this paper selects the following 32 attributes, as shown in Table 1.

The principles of constructing data samples in this paper:

(1) Fault setting: Take one of the most serious faults in all fault categories - three-phase grounding short circuit, randomly select 20 fault occurrence points, and the fault occurs at 0.2s, and the faults occur at 0.25s, 0.3s, The fault is removed at 0.35s and 0.4s;

(2) Time setting: the total time of the simulation is set to 20s;

(3) Load level setting: 5% is a step length, from 80% to 125%, set 10 load levels;

(4) Status mark: if the power angle difference between any two generators is greater than 360°, the system is considered to be transiently unstable, marked as 2; otherwise, it is transiently stable and marked as 1.

ISSN: 2414-1895 DOI: 10.6919/ICJE.202205_8(5).0041

Table 1. Attribute representation

time	Attributes	Attributes description
Before fault (Before t_o)	x_1	The sum of the generator reactive power
	x_2	The sum of node active power
	x_3	The sum of node reactive power
	x_4	The sum of the active power of each branch
	x_5	The sum of the reactive power of each branch
	x_6	Maximum value of node voltage
	x_7	Minimum value of node voltage
	x_8	The mean value of the node voltage
	x_9	Maximum value of branch current
	x_{10}	Minimum value of branch current
	x_{11}	Variance of branch current
The moment of fault (t_o)	x_{12}	Maximum value of branch current rate of change
	x_{13}	Minimum value of branch current rate of change
	x_{14}	Variance of branch current rate of change
	x_{15}	Maximum value of node voltage change rate
	x_{16}	The minimum value of the node voltage change rate
	x_{17}	Variance of node voltage rate of change
The moment of removing fault (time t_1)	x_{18}	Maximum value of generator reactive power acceleration
	x_{19}	Mean value of generator reactive power acceleration
	x_{20}	Variance of generator reactive power acceleration
	x_{21}	Maximum value of branch current
	x_{22}	Minimum value of branch current
	x_{23}	Variance of branch current
	x_{24}	Maximum value of node voltage change rate
	x_{25}	Minimum value of node voltage change rate
	x_{26}	Variance of node voltage rate of change
The period of t_o~ t_1	x_{27}	The maximum value of the reactive power variation of each generator in the system
	x_{28}	The mean value of the reactive power variation of each generator in the system
	x_{29}	The variance of the reactive power variation of each generator in the system
	x_{30}	The maximum value of the voltage phase angle change of each node
	x_{31}	The mean value of the voltage phase angle change of each node
	x_{32}	Variance of voltage phase angle change at each node
	x_{33}	The sum of branch active power changes
	x_{34}	The sum of branch reactive power changes
	x_{35}	The sum of node active power changes
	x_{36}	The sum of node reactive power changes

ISSN: 2414-1895 DOI: 10.6919/ICJE.202205_8(5).0041

5.2 Rough Set Attribute Reduction based on Information Entropy

Although certain experience and selection principles are combined, not all attributes have an effect on the transient stability assessment of the power system. The redundant attributes will increase the calculation amount of the assessment, and the calculation amount will increase exponentially, resulting in a reduction in effectiveness. Therefore, the collected data set needs to be preprocessed. In this paper, the rough set algorithm based on information entropy[18] is selected to reduce the attribute dimension, filter out redundant and useless attributes, and select some attributes that can retain the characteristics of the original data set, improve the real-time performance of calculation, and reduce the calculation space occupancy rate. There are only 16 attributes after reduction, and the set of reduced attributes is { x1, x2, x3, x5, x9, x11, x14, x20, x21, x24, x26, x29, x32, x33, x35, x36}.

5.3 Transient Stability Evaluation Index

The power system transient stability assessment is actually a dichotomous problem, which can be divided into the following four cases, as shown in Table 2.

Table 2. ISSA-ELM Classifier State Representation

Predicted state	Actual state	
	Stable	Unstable
Stable	S_{11}	S_{10}
Unstable	S_{01}	S_{00}

Among them, S11 represents the number of samples that are predicted to be stable and are actually stable, S10 represents the number of samples that are predicted to be stable but are actually unstable, S01 represents the number of samples that are unstable in prediction but are actually stable, and S00 represents the number of samples that are not stable in prediction and are actually unstable number.

Define evaluation metrics:

The prediction accuracy rate P_a of all samples represents the ratio of the correct samples to the total samples:

$$P_a = \frac{S_{11}+S_{00}}{S_{11}+S_{10}+S_{01}+S_{00}} \times 100\% \tag{13}$$

Stable sample prediction accuracy:

$$P_b = \frac{S_{11}}{S_{11}+S_{10}} \times 100\% \tag{14}$$

Unstable sample prediction accuracy:

$$P_c = \frac{S_{00}}{S_{01}+S_{00}} \times 100\% \tag{15}$$

Average accuracy:

$$A_v = \frac{2\times P_b \times P_c}{P_b+P_c} \times 100\% \tag{16}$$

Volume 8 Issue 5, 2022
DOI: 10.6919/ICJE.202205_8(5).0041

5.4 Results Analysis and Comparison

1000 sets of data were collected, of which 629 were stable samples and 371 were unstable samples. 700 groups were randomly selected as training data, and the remaining 300 groups were used as test data. Carry out 30 simulations through matlab, and calculate the average index of 30 times.

The improved SSA has a good convergence effect, and it has converged at the 8th iteration. As shown in Figure 4, the use of ISSA-ELM enables rapid evaluation, making the power system transient stability evaluation practical.

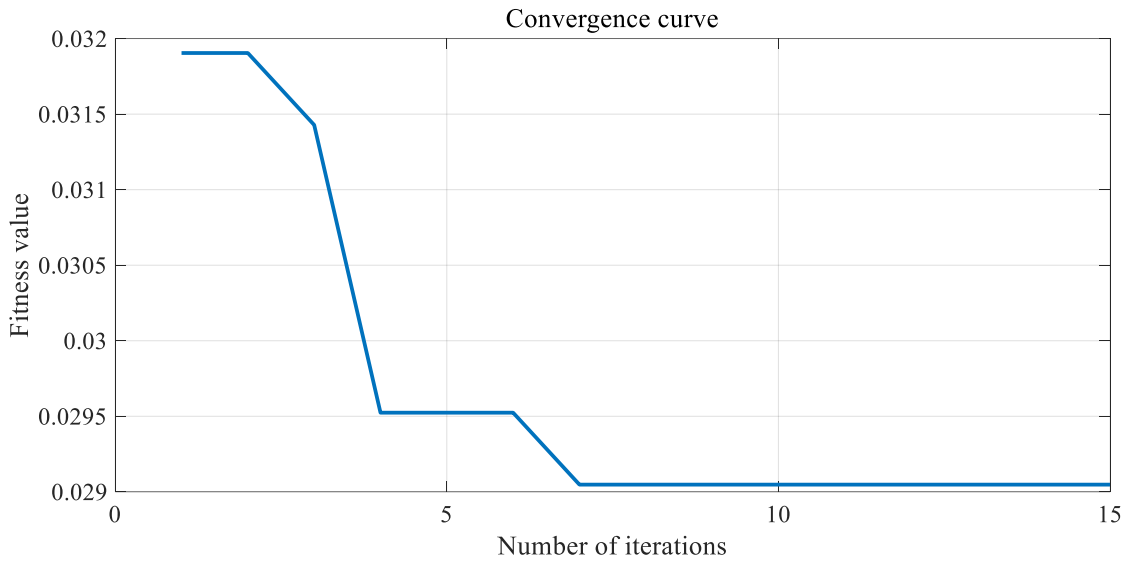

Figure 4. ISSA Convergence Result

The ISSA-optimized ELM is compared with the traditional ELM, as shown in Figure 5. It can be seen that the optimized ELM is more accurate and improves the generalization of ELM.

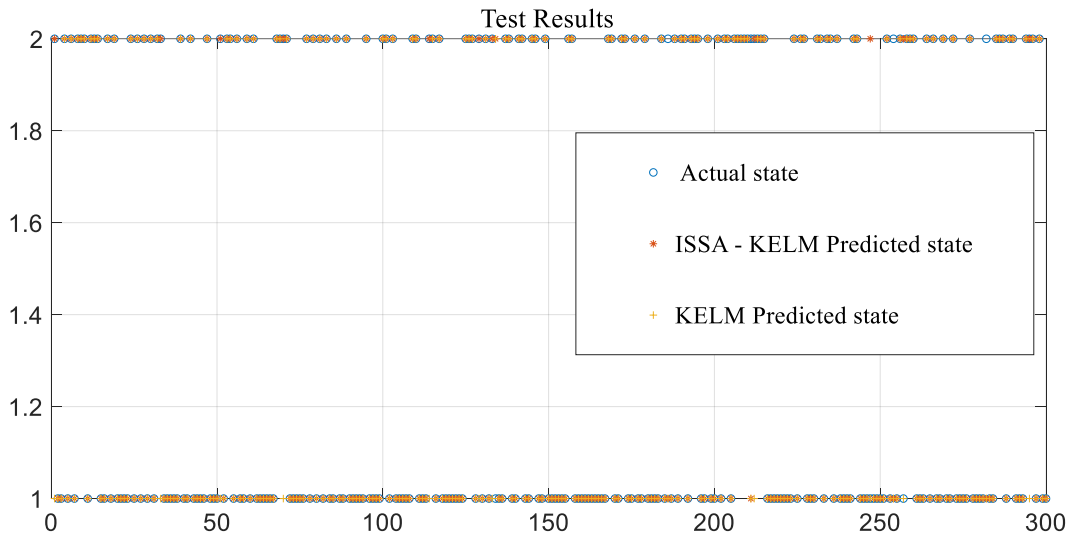

Figure 5. Comparison of ELM and ISSA-ELM test results

This paper also selects some common algorithms to compare the results, considering the classical neural network BP and SVM, and the comparison results are shown in Table 3. It can be seen from the results that the extreme learning machine optimized by the sparrow search algorithm has greatly

improved various indicators. And the improved sparrow search algorithm can further improve the index without falling into the local optimum.

Table 3. Results of each algorithm

Algorithm model	P_a	P_b	P_c	A_v
BP	85.0000	87.8453	80.6723	84.1061
SVM	87.3333	89.5027	84.0336	86.6820
ELM	88.6667	91.1602	84.8739	87.8527
SSA-ELM	96.6667	96.6851	96.6387	96.6618
ISSA-ELM	98.3333	98.3425	97.4790	97.9088

References

[1] Gomez F R, Rajapakse A D, Annakkage U D, et al. Support vector machine-based algorithm for post-fault transient stability status prediction using synchronized measurements[J]. IEEE Transactions on Power Systems, 2011, 26(3) : 1474-1483.

[2] Wang Tong, Liu Jiuliang, Zhu Shaoxuan, Wang Zengping. Transient stability assessment and emergency control strategy of power system based on random forest. Power Grid Technology. https://doi.org/10. 133 35/j.1000-3673.pst.2019.0909. (In Chinese).

[3] Amraee T,Ranjbar S.Transient instability prediction using decision tree technique[J] . IEEE Transactions on Power Systems, 2013, 28(3) : 3028-3037.

[4] Guo Luyu. Transient Stability Assessment of Power System Based on Machine Learning [D]. North China Electric Power University, 2021. DOI: 10.27139/d.cnki.ghbdu.2021.000184.

[5] Ye Shengyong, Wang Xiaoru, Liu Zhigang, et al. Transient Stability Assessment of Power System Based on Stacking Meta-Learning Strategy [J]. Power System Protection and Control, 2011: 12-6+23. (In Chinese).

[6] ZHU Qiaomu, DANG Jie, CHEN Jinfu, et al.A method for power system transient stability assessment based on deep belief networks[J].Proceedings of the CSEE, 2018, 38(3): 735-743. (In Chinese).

[7] Hu Wei, Zheng Le, Min Yong, et al.Research on power system transient stability assessment based on deep learning of big data technique[J]. Power System Technology, 2017, 41(10) :3140-3146. (In Chinese).

[8] Li Xiangwei, Liu Siyan, ,Gao Kunlun. Power system transient stability assessment based on bidirectional long short term memory network and convolutional neural network[J]. Science Technology and Engineering, 2020, 20(7) : 2733-2739.

[9] Dai Yuanhang, Chen Lei, Zhang Weiling, etc. Power System Transient Stability Based on Multi-Support Vector Machine Synthesis Evaluation [J]. Chinese Journal of Electrical Engineering, 2016, 36(5): 1173-1180. (In Chinese).

[10] Tian Fang, Zhou Xiaoxin, Yu Zhihong. Power system transient stability assessment based on support vector machine comprehensive classification model and key sample set[J]. Power System Protection and Control, 2017,45(22):1-8. (In Chinese).

[11] Xue J,Shen B.A novel swarm intelligence optimization approach:sparrow search algorithm[J].Systems Science & Control Engineering An Open Access Journal,2020,8(1):22-34.

[12] Lv Xin,Mu, Xiaodong,Zhang, Jun,Wang, Zhen.Chaos.Sparrow Search Optimization Algorithm[J/OL]. Journal of Beijing University of Aeronautics and Astronautics, {3},{4}{5}:1-10 [2021-07-19]. https:// doi.org/10.13700/j.bh.1001-5965.2020.0298.

[13] Huang, G. B., Zhu, Q. Y., & Siew, C. K. (2004). Extreme learning machine: a new learning scheme of feedforward neural networks. In Neural Networks, 2004. Proceedings. 2004 IEEE International Joint Conference on (Vol. 2, pp. 985-990). IEEE.

[14] Li Guoqing, Jiang Tao, Xu Qiumeng, Chen Houhe, Jia Hongjie. Margin Sensitivity Analysis and Application Based on Local Voltage Stability Index [J]. Electric Power Automation Equipment, 2012,32

(04):1-5+30. [15]PAI M A . Energy function analysis for power system stability [M]. Boston: Kluwer Academic Publishers, 1989: 256. (In Chinese).

[15] Ye Shengyong. Research on Transient Stability Evaluation of Power System Based on Machine Learning [D]. Southwest Jiaotong University, 2010. (In Chinese).

[16] Zhang Ruoyu. Transient Stability Assessment of Power System Based on Convolutional Neural Network [D]. Beijing Jiaotong University, 2020. DOI: 10.26944/d.cnki.gbfju.2020.000268. (In Chinese).

[17] Li Bingyang, Xiao Jianmei, Wang Xihuai. Transient Stability of Power System Combining Neighborhood Rough Reduction and Deep Forest Determined evaluation. Journal of Electrotechnical Technology. https://doi.org/10.19595/j.cnki.1000-6753.tces.190774. (In Chinese).

[18] Zhang Xiao and Liu Xia and Yang Yanyan. A Fast Feature Selection Algorithm by Accelerating Computation of Fuzzy Rough Set-Based Information Entropy[J]. Entropy, 2018, 20(10) : 788-788.