ISSN: 2414-1895 DOI: 10.6919/ICJE.202205_8(5).0018

Study on Power System Transient Stability Assessment based on Rough Intensive Reduction Method

Chuang Wang[a], Jianmei Xiao[b]

Logistics Engineering college, Shanghai Maritime University, Shanghai 201306, China

[a]2308964126@qq.com, [b]jmxiao@shmtu.edu.cn

Abstract

In modern smart grid operation, there is a great imbalance between transient stable samples and unstable samples, and the cost of misjudgment of unstable samples is different from that of misjudgment of stable samples. Current transient stability assessment methods based on machine learning are mostly based on shallow models, which pay insufficient attention to misjudged transient unstable samples and the assessment accuracy needs to be improved. Based on this problem, a rough intensive power system transient stability assessment method is proposed. The neighborhood rough set was used to find multiple optimal feature subsets at different granularity levels to recharacterize the original feature, and the nonlinear mapping between feature quantity and transient stable state was strengthened by machine learning. Weight classification is introduced to improve the attention of transient unstable samples in the classification process. Experimental results on ieee 10-machine 39-node system show that the proposed method can not only improve the evaluation accuracy, but also effectively reduce the misjudgment of transient unstable samples, and has a good performance on unbalanced samples, with certain robustness.

Keywords

Rough Intensive Reduction; Transient Stability Assessment; Power System.

1. Introduction

With the continuous development of national economy and the continuous increase of social demand, the power system plays an increasingly important role in the construction and development of the country, and continues to move towards the direction of intelligence; This makes the structure of power system more complicated, the scheduling and planning of the system difficult, and the uncertainty of the power grid in the operation process increased. The dynamic security problem of power system has been widely concerned, so the safety and stability analysis of power network also put forward higher requirements. Transient Stability Assessment (TSA) of power system refers to timely judging whether the system can maintain synchronous steady state when a large disturbance occurs [1]. Traditional power system transient stability assessment methods based on physical models have low efficiency in the face of complex large power grids [2,3], which is difficult to meet the requirements of real-time assessment. Moreover, some idealistic assumptions and simplification may lead to deviation between assessment results and actual situation. In recent years, the development of synchronous phasor measurement device and wide-area measurement system [4] makes it possible to collect massive synchronous data of power system in real time, which also provides a new idea for researchers to try to solve this problem from the perspective of machine learning. The transient stability assessment method based on rough set minimization method has attracted more and more scholars' attention in recent years because it can meet the requirements of real-time online assessment

ISSN: 2414-1895 DOI: 10.6919/ICJE.202205_8(5).0018

and has high assessment accuracy. This kind of method learns and reflects the change law of transient stable state of the system through characteristic data, and the primary consideration is to establish a set of transient feature set that has strong correlation with transient stable state. The feature data are collected under the group of features and a classification model is established to learn the nonlinear mapping relationship between the transient feature set and the transient stable state offline. Then, the newly received power grid sampling data can be evaluated online through the classification model completed by training to achieve the real-time transient stability evaluation requirements.

In this paper, a rough intensive power system transient stability assessment method is established from the perspective of machine learning. A set of initial transient feature set was constructed through a large number of simulation experiments, and the rough set reduction model was used to enhance the model learning performance. Finally, the effectiveness and robustness of the proposed transient stability assessment model were verified by simulation experiments.

2. Overview of Power System Transient Stability Assessment based on Rough Intensive Reduction Method

The current research on transient stability assessment methods of rough set reduction mainly includes feature selection and classifier construction. Its overall framework is shown in Figure 1. The transient characteristics of the choice of requirements from the massive amount of electric power system state high-dimensional selected can effectively reflect the state of the power system transient stability key characteristics, its decision to the review of state of transient stability limit, and the construction of a classifier is transient characteristics and the nonlinear mapping relationship between transient stability study, It determines the degree to which the model can approximate the upper limit of the evaluation.In term of transient feature construction, feature extraction refers to dimensionality reduction mapping of original feature space, which only considers the dimensionality reduction transformation process of features from the perspective of data distribution, and the extracted features do not have actual physical significance. Feature selection selects a set of key feature subsets with the same classification information as the original feature set from the original feature space, which is the screening and combination process of the original feature space. In terms of classifier construction, the current transient stability assessment model mainly includes support vector machine [5-7], decision tree [8,9] and neural network [12-13]. On the one hand, abstract representation learning of features can be carried out through multi-layer serial deep architecture to strengthen the nonlinear mapping between feature quantities and tag attributes. On the other hand, compared with shallow model, deep learning method has stronger learning ability and generalization ability, and higher evaluation accuracy. However, deep learning models usually need to be built on the basis of a large number of sample data. In the case of a small number of samples, the evaluation accuracy is usually low due to the insufficient fitting accuracy of data distribution. In addition, in order to carry out unbiased estimation of the distribution of training samples, existing deep learning methods [14] represented by deep confidence network tend to assume that the distribution between transient stable samples and transient unstable samples is balanced, and lack of attention to transient unstable samples. In the actual power grid operation, the power grid keeps the transient stability in most cases, and the transient instability is very rare. Therefore, the data amount of the transient stability sample and the transient instability sample often presents an obvious imbalance relationship. Therefore, on the basis of ensuring the overall evaluation performance, more attention should be paid to the evaluation accuracy of transient instability samples.

ISSN: 2414-1895 DOI: 10.6919/ICJE.202205_8(5).0018

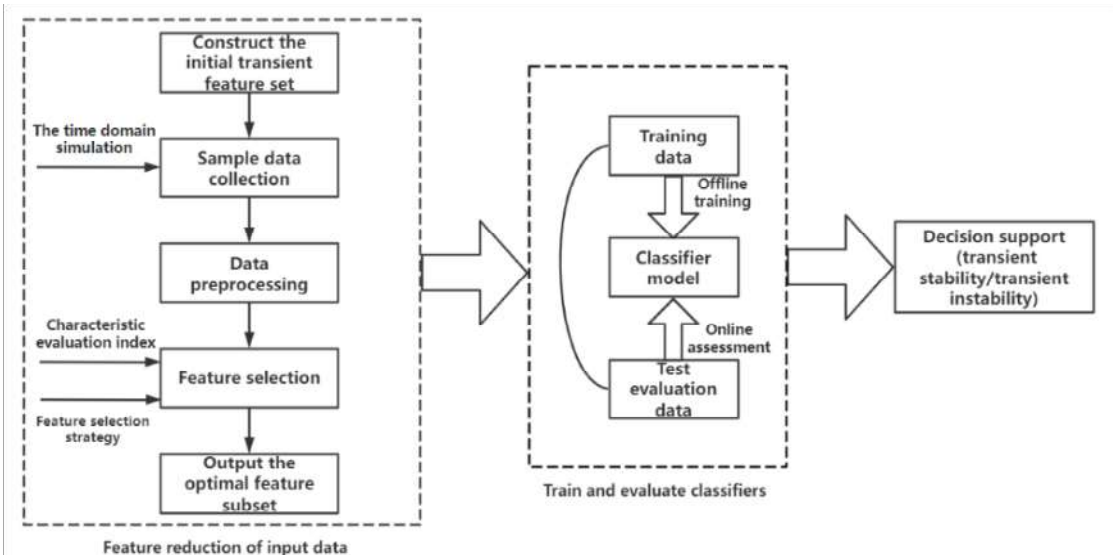

Figure 1. Power system transient stability assessment framework based on rough intensive reduction method

3. Principles and Methods of Selection and Construction of Transient Characteristic Quantities

The core of the transient stability assessment method based on rough set reduction method is to design a classification model to learn and fit the complex nonlinear mapping relationship between the transient characteristic quantity and the transient stability state (category). Therefore, it is the basis and key of this kind of method to construct a set of transient feature sets which are highly correlated with the transient stable states of power grid. The establishment of the initial transient feature set refers to the selection of a series of physical feature quantities that can reflect the dynamic performance of the system and the impact of faults on the system and provide information related to the transient stability of the system by these physical quantities. At present, there are two ways to construct the initial transient feature set of power grid. The first one directly constructs the initial transient feature set based on the power flow of the system before and after the failure, such as voltage amplitude and phase Angle of each bus in the system, active and reactive power distribution, etc. In the actual large system, too many input features will not only cause serious computational burden, reduce the accuracy of classification learning algorithm, but also prone to "dimension disaster" phenomenon. The second is to construct the initial feature set based on the combined variables of system parameters before and after faults. The transient stable states can be fully characterized by considering the "combined eigenvalues" of a set of systems under different time and space factors. This paper chooses the second method to construct the initial transient feature set. When constructing the initial transient feature set by using the "combined feature quantity" method, three aspects are usually considered: the principle of systematicness, the principle of main flow and the principle of real time. That is, the selected feature quantity is required to meet the following principles :(1) the scale of the selected feature quantity does not change with the change of the system, but should be the combined index of the state variables of each component in the system; (2) There is a high correlation between the selected characteristic values and the transient stable state, which can reflect the transient stable state of the system well; (3) The selected feature quantity should be complete in time and should reflect the state of the system before and after the occurrence of the fault, so as to better understand the impact of the fault on the system.

According to the above three principles, on the basis of a large number of simulation experiments, and based on the study and summary of existing literature, this paper constructed a group of 32-dimensional transient characteristic quantities. The generator and line physical quantities are taken from the generator and line physical quantities taken from the generator and line physical quantities

ISSN: 2414-1895 DOI: 10.6919/ICJE.202205_8(5).0018

taken from the generator and line physical quantities taken from the generator and line physical quantities taken from the generator and line physical quantities taken from the generator.

4. Power System Transient Stability Feature Selection based on Rough Reduction Method

4.1 Power System Transient Feature Selection Principle

The 32-dimensional initial transient feature set established in the previous section is derived from the summary of existing literature and depends on certain expert experience. Therefore, the established transient feature set may have high redundancy. Therefore, after the initial transient feature set is constructed, it is usually necessary to further compress or reduce it to extract key features and reduce the redundancy of feature set.

The following aspects are usually considered in optimal subset selection or feature reduction of transient features :(1) the reduced set should have similar consistent classification ability with the original feature set to ensure the classification ability of the system. (2) In the selection process of feature subset, similar and repeated features should be deleted to ensure the independence of each feature in the reduced set. (3) In the process of feature selection, the overall effect of different feature combinations should be fully considered, rather than simply sorting according to the merits of a single feature. (4) On the basis of ensuring the classification performance of the system, the selected feature subset should contain as few features as possible.

In order to eliminate the redundant properties of power system transient features and find out the minimum feature combination while ensuring the classification accuracy of classifier, this paper uses neighborhood identification matrix method to solve it. In order to verify the performance of the algorithm, a New England 10-machine 39-node system [15] was taken as the research object for analysis.

4.2 Example Introduction and Sample Collection

The New England 10-machine 39-node system (also known as ieee 10-machine 39-node System) is a well-known test system used to study the stability and dynamic security analysis of power systems. The system consists of 10 generators, 39 nodes, 19 loads and 46 transmission lines, of which generator 1 represents an interconnected power system in Canada. Specific parameters of the system can be found in reference [15], and the single line diagram of the system is shown in Figure 2.

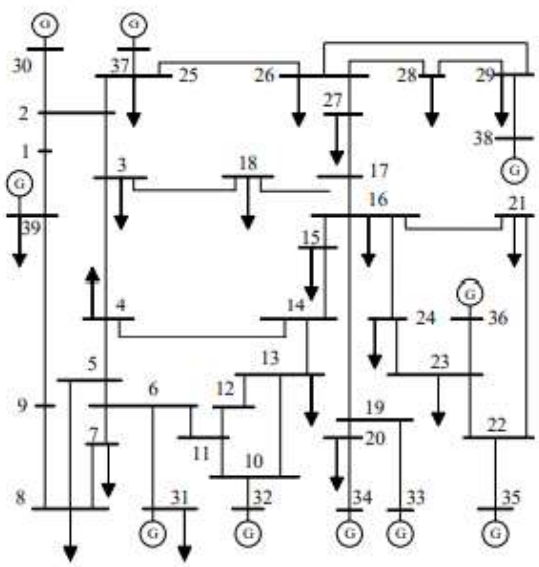

Figure 2. Single line diagram of the 39-node system on IEEE10

ISSN: 2414-1895 DOI: 10.6919/ICJE.202205_8(5).0018

Time domain simulation was performed on a 10-machine 39-node system in New England and data acquisition was performed according to the listed features. The specific environment Settings of the simulation are as follows: take 5% as the step length, set a total of 10 different load levels ranging from 80% to 125%, and change the generator output accordingly. Fifteen fault locations were randomly selected for each load level, and the fault type was set to three-phase short circuit. It is assumed that the fault occurs at 0.1s, and the fault is cleared at 0.2s,0.25s,0.3s and 0.35s respectively. The simulation duration was set as 3S. After the fault is rectified, the lines overlap and the system topology remains unchanged. The transient stable state of the system is judged by whether the rotor Angle deviation of any two generators in the system exceeds 180° at the end of the simulation. If it exceeds 180°, the system is judged to be transient unstable, and the corresponding category label is marked as 0. Otherwise, the system is judged to be stable and the category label is marked as 1. A total of 600 groups of sample data were generated by simulation, including 310 groups of transient stable samples and 290 groups of transient unstable samples. The above simulation is realized in Matlab/Simulink.

4.3 Transient Feature Evaluation and Selection based on Neighborhood Identification Matrix and Neighborhood Rough Reduction

In order to compare the advantages and disadvantages of different attributes, it is necessary to design an appropriate feature evaluation function. In this paper, a rough computing model based on neighborhood identification matrix is used to evaluate the consistent classification ability of different features. On the one hand, the rough computing model based on neighborhood identification matrix can directly process the power system data, which has a good adaptability to the power system data with the characteristics of continuity, and avoids the defect of the traditional rough set model requiring discrete operation of the data. On the other hand, the importance measurement method under the framework of neighborhood identification matrix can not only directly reflect the consistent classification ability of different features, but also is more interpretive than principal component analysis and traditional rough positive domain evaluation methods, which is more conducive to the importance measurement analysis of different transient features.

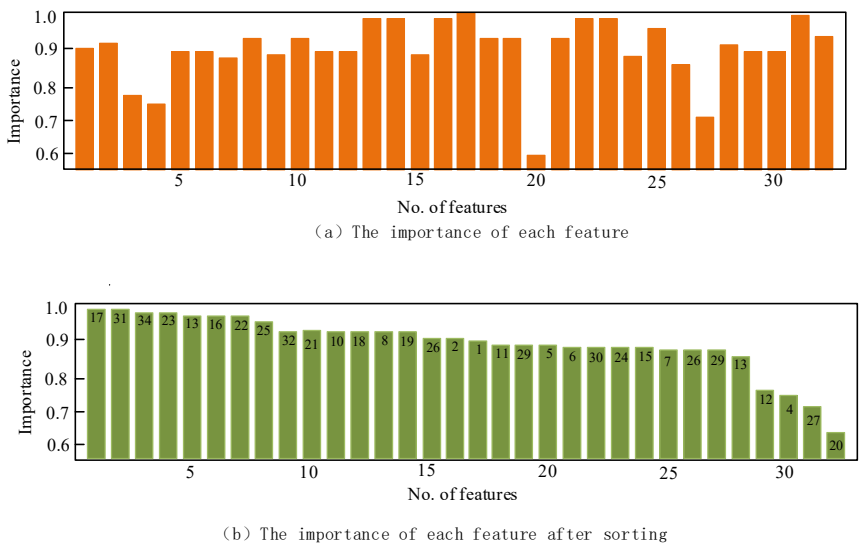

Figure 3. (a) Importance degree of each feature and (b) distribution of ranked features and importance degree

Firstly, the consistent classification ability of different features is analyzed, and the importance of different features relative to decision attributes (labels) is calculated by using the concept of importance under neighborhood identification matrix. By adjusting the value of neighborhood control parameter λ, the size of neighborhood particles of samples can be controlled, so as to obtain the results

ISSN: 2414-1895 DOI: 10.6919/ICJE.202205_8(5).0018

of feature evaluation and reduction at different granularity analysis levels. Take λ as 0.25, and the result is shown in Figure 3.

As can be seen from the figure 3, several characteristics of the highest importance are is one of the largest generator rotor fault clearing time kinetic energy of the relative rotor angles, fault clearing time average generator rotor angular velocity, fault clearing time average kinetic energy and the generator rotor failure moment and fault clearing time relative to the rotor acceleration difference, etc. The characteristics with the lowest importance are the difference of rotor angular velocity between fault occurrence and fault removal time, the extreme difference of rotor kinetic energy change rate at fault removal time, the minimum and maximum active power impact at fault occurrence time, etc.

It is not difficult to find that most of the features that have high correlation with the transient stability state of the system are the characteristic quantities at the time of fault clearing, while the correlation degree between the transient characteristic quantities at the time of fault occurrence and the transient stability state of the system is relatively low. In order to intuitively reflect the changes of the model's classification ability to the system when different features are added, the features are added to a feature set initialized as an empty set after the importance of features is sorted. Artificial Neural Network (ANN), Support Vector Machine (SVM), SVM and Classification and Regression tree (CART) are commonly used to evaluate the Classification performance of feature sets. The ANN adopts double hidden layer structure, and the training algorithm is L-M algorithm. Both RBF-SVM and CART use the default parameter Settings in Matlab toolbox. 70% samples were randomly selected as training samples, and the rest samples were used for testing; The model classification accuracy varies with the number of features added, as shown in Figure 4.

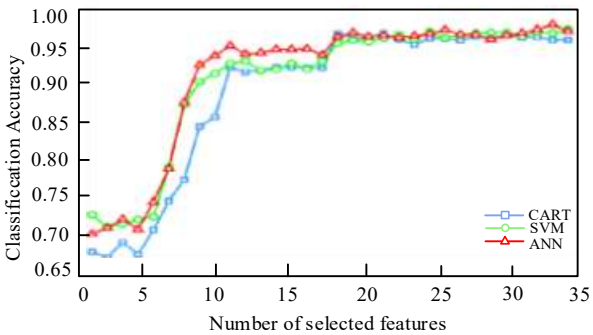

Figure 4. Model classification accuracy changes with the number of features added

As can be seen from Figure 4, when the number of added features is less than 5, the addition of new features does not significantly improve the classification accuracy of the model. This indicates that although the first five features are of great importance, the effective classification information they can provide is highly repetitive and similar. When the number of added features is between 5 and 10, the classification accuracy of the model increases significantly with the addition of new features, which means that the added features and the classification information provided by the existing features are different. Therefore, the addition of new features will increase the total classification information and improve the classification performance of the model. When feature 18 was added, the classification accuracy of the model no longer improved significantly, and began to maintain around 0.95. This indicates that the current feature set has provided the maximum effective classification information, and there are a large number of redundant attributes in the original feature space, so it is necessary to select and reduce the feature subset. Furthermore, the proposed reduction algorithm based on neighborhood identification matrix is used to select the subset of key transient features. In order to reflect the performance of the proposed algorithm in the transient feature selection problem, some existing transient feature reduction methods of power system were selected for

ISSN: 2414-1895 DOI: 10.6919/ICJE.202205_8(5).0018

comparison, including Pawlak rough set based reduction method (RS), cultural algorithm-based reduction method (MA). The population size and maximum iteration times in MA are set at 30 and 100 respectively. In RS, the data is discretized by the isofrequency discretization method. The results are shown in Table 1. In Table 1, the order of selected features is given in accordance with the algorithm's selection of features.

Table 1. Comparison of results of different algorithms

Feature reduction methods	Selected optimal feature subset	Feature dimension	Classification accuracy （%）ANN	Classification accuracy （%）CART	Classification accuracy （%）SVM
NDM	17,1,10,7,3,2	6	95.76±1.67	95.34±1.83	95.78±1.77
MA	1,2,4,7,8,14,17,23,26,31	10	96.02±1.87	95.08±2.01	95.28±1.70
RS	17,2,13,12,21,7,3,27,25,4,9	11	95.28±2.08	95.11±1.88	94.26±2.08
Original transient feature set	--	32	96.45±1.68	94.77±2.03	95.67±1.62

It can be seen from Table 1 that the optimal feature dimension selected by the reduction algorithm of neighborhood identification matrix in the experimental data is only 20% of the original feature set, but its classification accuracy is similar to or even better than the original feature set. In addition, according to the RESULTS of NDM, the optimal feature subset is not only composed of the first "N" features, but also includes features with low importance such as feature 3 and 7. Therefore, the optimal feature subset is a selection process of the optimal "feature combination", which also reflects the importance of feature selection strategy. MA and RS selected 10 and 11 optimal features, respectively. The number of selected features was more than that of NDM, but its classification performance was slightly lower than that of NDM. For MA, this is because it is easy to fall into local optimum in the calculation process, and the results are sensitive to the setting of control parameters. RS can only process symbolic data, so it first needs to discretize the original data, which will inevitably lead to information loss. It can be seen from the above analysis that NDM has certain advantages and can better deal with transient feature selection.

5. Example Analysis of New England 10-machine 39-node System

To verify the validity of the proposed evaluation model, time domain simulation and data acquisition were performed on a 39-node system with 10 machines in New England. Standard system topology and N-1 fault operating environment are considered in the simulation. In the n-1 fault environment, it is assumed that any transmission line or transformer in the system fails due to failure. Set a total of 10 different load levels from 80% to 125% in steps of 5%. Randomly select 20 fault locations for each operating environment. Table 2 is the possible fault probability table of the power system given by the working group of THE IEEE Special Committee on Power Systems. According to this table, the fault types in the experiment are three-phase short circuit, two-phase short circuit, two-phase ground short circuit and single-phase ground short circuit. Since transient instability rarely occurs, in order to obtain more instability samples, the probability of occurrence of the above failure types was set as 0.1, 0.15, 0.2 and 0.55 respectively in the experiment. It is assumed that the fault occurs at 0.1s, and the fault is cleared at 0.2s,0.25s,0.3s and 0.35s respectively. After the fault is rectified, the lines overlap and the system topology remains unchanged. The simulation duration is set to 5s. The simulation experiments are implemented in Matlab/Simulink. A total of 8000 groups of sample data were generated by simulation, including 5426 groups of transient stable samples and 2574 groups of unstable samples. After sample sampling, min-Max standardization method was used to normalize all sample data to eliminate the influence of attribute dimension difference on the learning process.

ISSN: 2414-1895 DOI: 10.6919/ICJE.202205_8(5).0018

Table 2. Different probability of failure

Fault type	Probability of occurrence
Three-phase short circuit	0.01
Two-phase short circuit	0.04
Two-phase short circuit to ground	0.02
Single phase to ground short circuit	0.93

5.1 Influence of Model Parameters

The model parameters proposed in this paper are the setting of neighborhood threshold in the neighborhood rough reduction stage, which is determined by neighborhood control parameter λ. In the neighborhood rough reduction stage, the corresponding neighborhood threshold is set at the step of 0.01 according to the range of neighborhood control parameters [0.2,0.5] for reduction operation, and several groups of reduction results with the largest difference are selected as the final feature subset. The results are shown in Table 3.

The order of features in Table 3 is given in accordance with the order selected in the neighborhood rough reduction algorithm. Finally, a total of 6 groups of feature subsets were selected, among which at least 40% of the elements in each group of feature subsets were different, so as to ensure the mutuality of different feature subsets. In each set of selected feature subspaces, the original input features are rerepresented and connected in series to obtain 60-dimensional enhanced rerepresentation features, which are further connected with the 10-dimensional class vectors of each level of learning to form 70-dimensional higher-order abstract features as input features of the next level to participate in learning.

Table 3. Results of rough parsimony in neighborhood

Granularity Level	Reduced feature subset
1	17,12,6,7,27,3,15
2	17,12,32,27,13,30,2,3
3	26,12,16,27,15,6,17,2,30
4	26,12,16,27,13,17,3,1,2,4
5	26,27,15,12,14,17,19,4,1,13
6	10,26,27,12,15,11,18,3,2,7,13

5.2 Performance Comparison of Different Models

In order to verify the performance of the model, the commonly used power system transient stability assessment classifiers are selected for comparative analysis. The selected classifier models include Classification and Regression Tree (CART), Naive Bayes (NB), Support Vector Machine (SVM), And Artificial Neural Network (ANN). The artificial neural network adopts three-layer hidden layer structure and the training algorithm adopts momentum gradient descent algorithm. In experiments choice classification accuracy ($A\ C$), safety ($S\ D$), G - means index ($G\ M$) and F - measures indicators ($F\ M$) for performance evaluation. The number of correctly classified stable samples, incorrectly classified stable samples, correctly classified unstable samples, and incorrectly classified unstable samples were denoted as TS, FS, TU, and FU according to the confusion matrix in Table 4. There are:

$$AC = \frac{TS + TU}{TS + FS + TU + FU} \tag{1}$$

ISSN: 2414-1895 DOI: 10.6919/ICJE.202205_8(5).0018

$$SD = \frac{TU}{TU + FU} \tag{2}$$

$$GM = \sqrt{\frac{TS}{TS + FS} \cdot \frac{TU}{TU + FU}} \tag{3}$$

$$FM = \frac{TU}{TU + FS} \cdot \frac{TU}{TU + FU} \tag{4}$$

The safety degree reflects the classification accuracy of transient instability samples by the model. The higher the security, the lower the misclassification rate of transient unstable samples, and the higher the relative security of the system. The G-means index comprehensively considers the assessment accuracy of transient stability samples and transient instability samples. The larger the G-means value is, the more balanced the model is in learning different types of samples, and the better the evaluation performance is. The F-MEASURES index comprehensively considers the instability samples to evaluate the stability and accuracy. The F-Measures value will increase only when the classification accuracy of unstable samples is improved and the classification level of stable samples remains low.

Table 4. Transient data representation under confusion matrix

Predictive value / Actual Value	Transient Stability	Transient Instability
Transient Stability	TS	FS
Transient Instability	FU	TU

For convenience, the algorithm in this paper is abbreviated as NRRDF. The results are shown in Table 5.

Table 5. Performance comparison of different models

Classification Model	AC	SD	GM	FM
NRRDF	0.9827	0.9837	0.9828	0.9532
CART	0.9537	0.9262	0.9477	0.8755
NB	0.8933	0.8845	0.8913	0.7295
SVM	0.9465	0.9466	0.9466	0.8583
ANN	0.9466	0.9168	0.9398	0.8523

As can be seen from the results in Table 5, compared with several other commonly used power system transient stability assessment models, the classification accuracy of transient instability samples proposed in this paper reaches 98.27%, which is 3.72 and 9.92 percentage points higher than SVM and NB, which are the second best and worst in SD index, respectively. This shows that the proposed model can effectively pay more attention to transient instable samples and reduce the misclassification rate of transient instable samples. In addition, the proposed model also has the best performance in other performance indexes, and the performance of each index is more stable. Taking SVM as an example, the overall classification accuracy of the proposed model is only 3.62 percentage

Volume 8 Issue 5, 2022
DOI: 10.6919/ICJE.202205_8(5).0018

points higher, but the classification accuracy of transient instable samples is 9.49 percentage points higher. This is caused by the learning limitations of shallow models themselves. On the one hand, the shallow model can not efficiently learn the representation of the feature input, and it is difficult to fully extract the useful information of the feature, so the generalization learning ability of many complex nonlinear mapping problems is limited. On the other hand, the existing methods assume that samples of different categories are evenly distributed during the learning process, and lack of attention to sample imbalance. In contrast, the model proposed in this paper can effectively carry out high-order abstract transformation of feature information, mine more rich information hidden in the data, and improve the learning ability of the model. In addition, the model can pay more attention to the transient instable samples and reduce the misjudgment rate because the class vector is weighted adaptively according to the degree of sample imbalance in the learning process, and the transient instable samples are given higher weights.

5.3 Model Performance under Different Sample Sizes

Further, the performance of the model under different sample sizes is studied. As one of the characteristics of Deep learning is the efficient learning ability of big data, Deep Belief network (DBN)[12], the most representative of Deep learning, is selected in this section for performance comparison. From the original 8000 groups of sample data, 1000 to 8000 groups of sample data were randomly selected with 1000 step size. The performance of the proposed model and DBN was evaluated by using 10 fold cross validation in different sample sizes. DBN is selected as the 3-layer network structure {10-15-20}, which is the network structure parameters selected under the optimal results of multiple experiments according to the empirical method. Experimental results are shown in Figure 5.

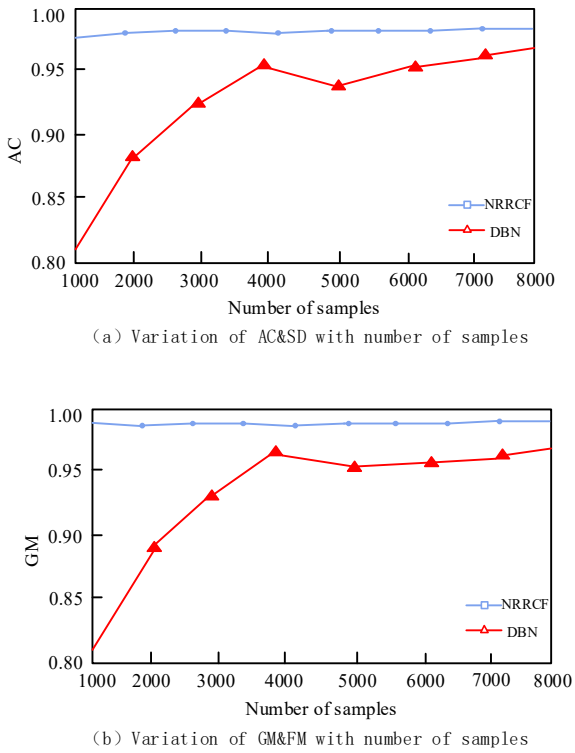

Figure 5. Model classification accuracy changes with the number of features added

As can be seen from the results in Figure 5, the number of samples has a significant impact on the evaluation performance of DBN. When the sample size is small, the performance of DBN is obviously worse than that of NRRDF. As the number of samples increases, the performance of DBN in various performance indicators gradually improves, and the smaller the number of samples, the more obvious

ISSN: 2414-1895 DOI: 10.6919/ICJE.202205_8(5).0018

the performance improvement effect brought by increasing the number of samples. When the number of samples reaches 4000, the improvement effect of increasing the number of samples on DBN performance gradually tends to moderate, showing a trend of slow increase. In contrast, the model proposed in this paper is less affected by sample size and performs well in different sample sizes. Especially when the number of samples is small, the model proposed in this paper has obvious advantages over DBN. Although with the increase of the number of samples, the gap between the two gradually narrowed, but finally NRRDF is better than DBN in four evaluation indicators. This is because, unlike DBN, NRRDF does not rely on big data for unbiased estimation of sample distribution. In addition, DBN model depth is usually a fixed structure, and the depth of the proposed model can be adaptively determined through layer by layer evaluation of the training process in the learning process. Therefore, under different sample sizes, the proposed model has good performance and strong robustness.

References

[1] Zhou Xiaoxin, Li Hanxiang, Wu Xizhong. Power System Analysis [M]. Beijing: Graduate School of Electric Power Research Institute, Ministry of Energy, 1989.

[2] Jiang Tao, Wang Changjiang, Chen Houhe, et al. Transient stability assessment of power system based on regularized projection twin support vector machine[J]. Automation of Electric Power Systems, 2019, 43(1): 141-148.

[3] Tan Bendong, Yang Jun, Lai Qiupin. Sample Enhancement Method for Power System Transient Stability Assessment Based on Improved CGAN [J]. Automation of Electric Power Systems, 2019, 43(1): 149-157.

[4] Luo Shenzeng, Li Yinhong, Shi Dongyuan. Probabilistic evaluation of the observability of a wide-area measurement system and its application in the optimal configuration of PMU [J]. Chinese Journal of Electrotechnical Technology, 2018, 33(8): 1844-1853.

[5] Dai Yuanhang, Chen Lei, Zhang Weiling, et al. Transient Stability Assessment of Power Systems Based on Multi-Support Vector Machine Synthesis [J]. Chinese Journal of Electrical Engineering, 2016, 36(5): 1173-1180.

[6] Zhou Yanzhen, Wu Junyong, Yu Zhihong, et al. Support vector machine combined classifier for power system transient stability prediction and its reliability evaluation [J]. Power Grid Technology, 2017, 41(4): 1188-1196.

[7] Wang B, Fang B W, Wang Y J, et al. Power system transient stability assessment based on big data and the core vector machine[J]. IEEE Transactions on Smart Grid, 2016, 7(5): 2561-2570.

[8] Shi Fang, Zhang Linlin, Hu Xiongwei. Extraction method of power grid transient stability rules based on multi-attribute decision tree [J]. Journal of Electrotechnical Technology, 2018, 33(23): 36-47.

[9] Rahmatian M, Chen Y C, Palizban A. Transient stability assessment via decision trees and multivariate adaptive regression splines[J]. Electric Power Systems Research, 2017, 142: 320-328.

[10] Yang Weiquan, Zhu Yuanzhen, Liu Yutian. Rapid Evaluation of Transient Voltage Stability Based on Convolutional Neural Networks [J]. Automation of Electric Power Systems, 2019, 43(22): 46-52.

[11] Li Yang, Li Guoqing, Gu Xueping, et al. Transient Stability Assessment Method Based on Integrated OS-ELM [J]. Journal of Electrotechnical Technology, 2015, 30(14): 412-418.

[12] Zhu Qiaomu, Dang Jie, Chen Jinfu. Power System Transient Stability Assessment Method Based on Deep Belief Network [J]. Chinese Journal of Electrical Engineering, 2018, 38(3): 735-743.

[13] Hu Wei, Zheng Le, Min Yong. Research on Transient Stability Evaluation of Power System After Fault Based on Deep Learning [J]. Power Grid Technology, 2017, 41(10): 3140-33146.

[14] Yin Xueyan, Yan Jiongcheng, Liu Yutian. Transient Stability Assessment and Severity Classification Based on Deep Learning [J]. Electric Power Automation Equipment, 2018, 38(5): 64-69.

[15] Pai A M. Energy function analysis for power system stability[M]. Bonston: Kluwer Academic Publishers, 1986.