ISSN: 2414-1895 DOI: 10.6919/ICJE.202204_8(4).0065

Green Farmland Precision Irrigation Monitoring System

Xingyu Zhao*, Chaofan Ma

Xi'an Traffic Enginering Institute, Xi'an, 710300, China

Abstract

The system is mainly driven by STM32 series single chip microcomputer. Aiming at the accurate monitoring of wheat environment in Guanzhong area of Shaanxi Province, the system collects the real-time data of the whole growth process of wheat and environmental factors, and uses the Internet of things technology to monitor the wheat environment, so as to provide decision support for the accurate irrigation system. All kinds of information and data collected by the sensor network are used to intelligently determine the irrigation water consumption through fuzzy PID control, combined with programmable controller and frequency converter to realize precision irrigation. Compared with ordinary irrigation, digital, networked and intelligent precision irrigation is realized, which can save more than 70% water, save more than 30% fertilizer and improve the utilization rate of fertilizer by more than 50%, so as to achieve high yield, high quality High efficiency water and fertilizer integrated irrigation. The study has a positive effect on agricultural irrigation in Guanzhong area of Shaanxi Province.

Keywords

STM32 Series Single Chip Microcomputer; Fuzzy PID; Precision Irrigation; Programmable Controller.

1. Introduction

In the mobile Internet era of rapid development and wide application, for the efficient implementation of facilities agriculture environmental data monitoring and management, in view of the agricultural infrastructure environment complex wiring, research based on wireless sensor network (WSN), the application of STM32 microprocessor system, real time images of the environment, temperature, humidity, light intensity and CO2 sensor data, and through GPRS The wireless communication module transmits the collected data to the cloud management server [1]. Green precision intelligent monitoring system of agricultural irrigation farmland simple goal is to make more intelligent, convenient control system through the cooperation of complex intelligent, improve system reliability and flexibility, in order to further promote green precision irrigation farmland monitoring system in application in the guanzhong region of shaanxi province, this study on monitoring system of irrigation and precision irrigation control theory as the foundation, This paper discusses the application of Internet irrigation technology in agriculture, hoping to provide reference for further research in the field of intelligent agriculture.

2. System Hardware Design

The system is mainly composed of perception module, control module, output module, perception module ACTS on agricultural endings consists of various types of sensors and hardware devices, control module mainly consist of all kinds of controller and the control program, mainly through various sensors to collect data and historical data contrast through the system analysis [1], Through

ISSN: 2414-1895 DOI: 10.6919/ICJE.202204_8(4).0065

the difference of calculation results to adjust the water quantity, and finally by the output module to complete the irrigation, making the whole system more intelligent and modern.

The system uses STM32 series microcontroller and various sensors to collect environmental information, monitor the internal pressure and flow value of the pipeline, compare and judge the real-time data with the set value in the controller program, control the duration of solenoid valve and water pump with PID, and implement precise irrigation control according to the environmental parameters [2].

3. Design of Converter

The system converts the sensor acquisition semaphores into binary digital quantities, which are output to the controller and compared with the parameters in the big data. The output of the set parameters is applied to the controlled object to realize the control of irrigation water consumption [3]. Precision irrigation is realized through the collection and comparison of monitoring input information.

4. Simulation Verification

Input "fuzzy" in the "command window" of MATLAB command, open the editor of fuzzy reasoning system, and set the membership function of fuzzy language variable of input and output. In Simulink environment, fuzzy self-tuning PID and conventional PID control system are constructed respectively. Because variable frequency speed control pump motor speed control process is a time - varying nonlinear system, so in the simulation, the first - order inertia link and lag link are approximately equivalent. The unit step response simulation model of two-dimensional fuzzy controller is established, as shown in FIG. 1.

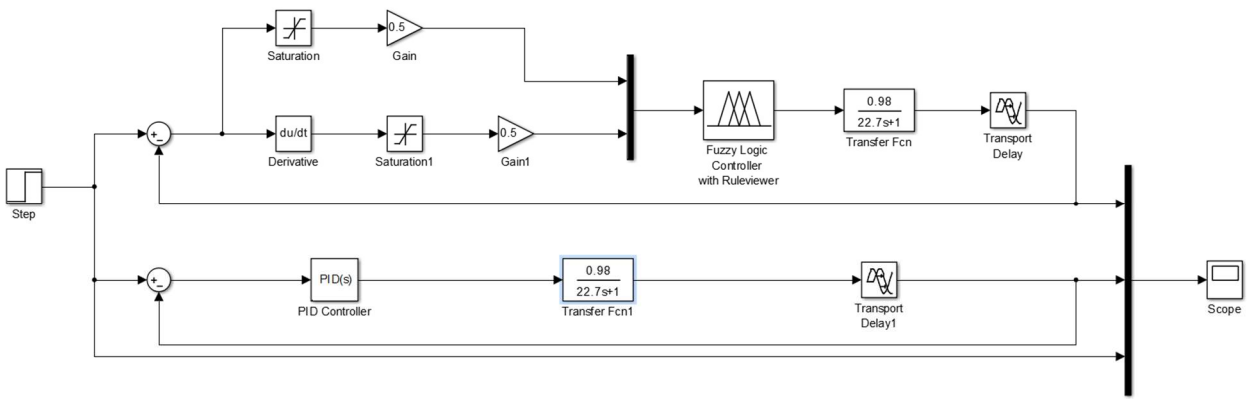

Fig. 1 MATLAB simulation diagram

The transfer function of the first-order inertia bar is K=0.75,T=20.5 and delay time τ = 5.5. Set the amplitude of the input step signal to the value of the pipe network pressure under normal conditions.

It can be seen from the simulation results that the overshoot of fuzzy PID control is 0.085 and the adjustment time is 7.5s, while the overshoot of PID control method with the same parameters is 0.155 and the adjustment time is 13s. In contrast, we can come to the conclusion that. Compared with the conventional PID controller, the adjusting time is shortened by 1.5s, the overshoot is reduced by 22%, the system response is faster, and the overshoot suppression effect is obvious.

5. Simulation Results of Control System

Press such as the design in the proteus simulation as shown in figure 2, press the button, the single chip microcomputer real-time acquisition of soil parameters, soil, irrigation water is calculated

Volume 8 Issue 4, 2022
DOI: 10.6919/ICJE.202204_8(4).0065

respectively two motor pump and electromagnetic valve, open the inverter, when the sensors detect the environmental state to forecast, the electromagnetic valve and pump start work, until to the expected value, frequency converter closed, The system stops working and the irrigation process ends. In order to reduce the amount of water in the pipe generated by actual irrigation, the delay procedure should be set up.

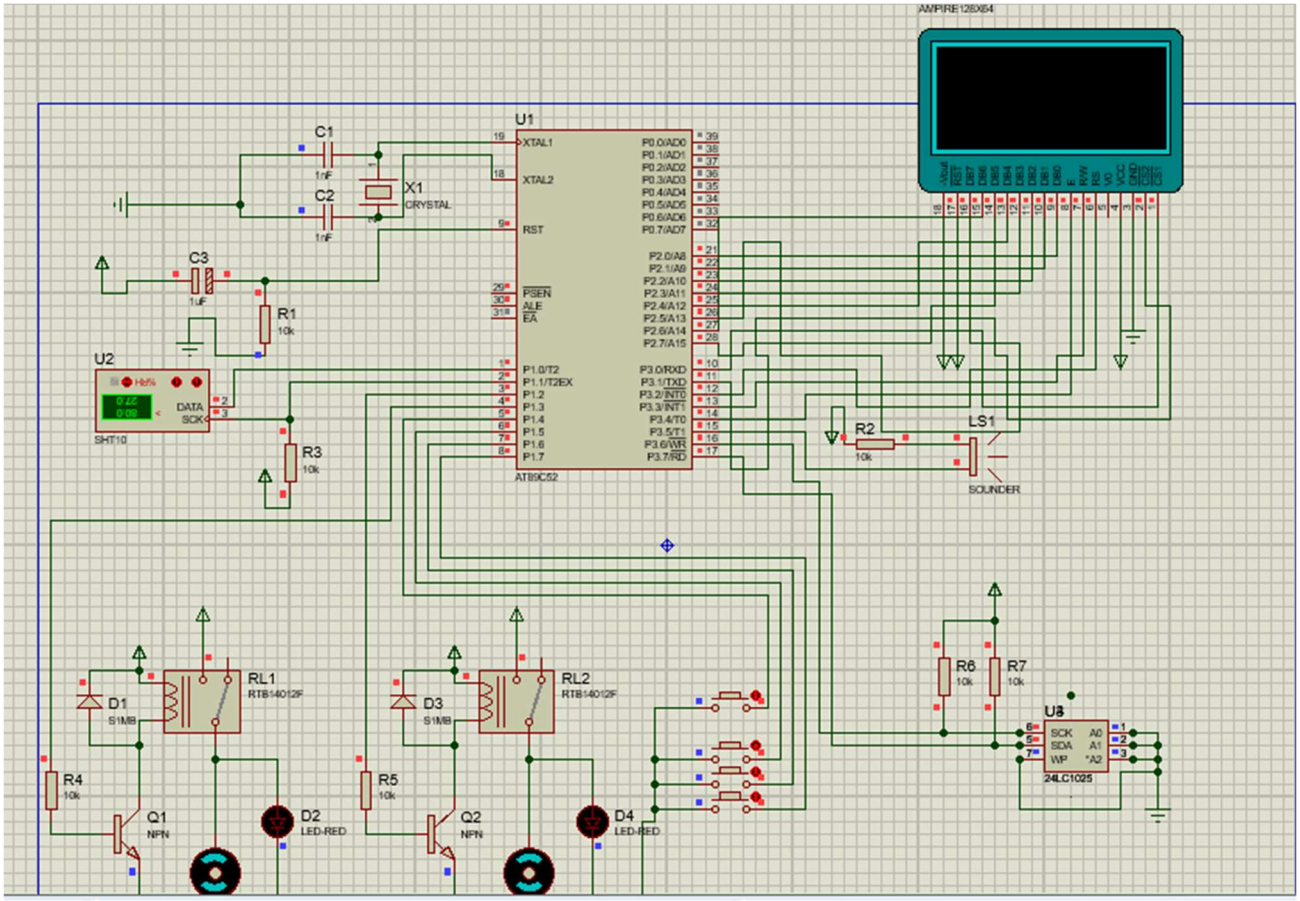

Fig. 2 Control system simulation

6. Result Analysis

To verify the actual effect, a wheat field was taken as the experimental object, and the experimental results are shown in Table 1.

Table 1. Variation of pipe network pressure data

Time/s	0	5	8	10	12	14	16	18	20
Pressure/Mpa	0	0.095	0.225	0.363	0.452	0.472	0.427	0.397	0.4
Time/s	22	24	26	28	30	32	37	42	50
pressure/Mpa	0.4	0.4	0.4	0.4	0.4	0.4	0.4	0.4	0.4

As can be seen from the experimental results, the pressure reaches the maximum value of 0.472Mpa in the 14th second, and the overshoot of the system is 2.5%. After the 20th second, the pressure in the tube is stable at 0.4Mpa, and the water pressure is stable. The desired effect is achieved and accurate irrigation is effectively realized.

ISSN: 2414-1895 DOI: 10.6919/ICJE.202204_8(4).0065

7. Conclusion

This paper designs a green farmland precision irrigation monitoring system based on STM32. STM32 microcontroller is selected as the core control chip. Soil moisture is monitored by DHT11 sensor, air humidity is monitored by 5TE sensor, soil ph is monitored by BQC-FC8350 sensor, and temperature is monitored by DS1380 sensor. Through the A-D conversion module, the measured data is converted into digital quantities and sent to the central processing equipment, which controls the farmland irrigation device. At the same time, the system has the functions of ph alarm, LIQUID crystal display and button control, which are flexible and flexible, and can switch back and forth automatically and manually, with high reliability and stability, providing better basic conditions for further research on agricultural precision irrigation in the future.

Acknowledgments

This paper was supported by innovation and Entrepreneurship Training Program for College students (Project number:2021DC32).

References

[1] Bernier H, Cottinet M L. A low-cost real-time multitasking computerized controller for farm buildings[J]. Paper-American Society of Agricultural Engineers (USA), 1989. 30-46.

[2] Baum J,Campbell A M. PC-based environmental control systems for plant and animalstructures[J]. American Society of Agricultural Engineers (Microfiche collection)(USA), 1987.45-51.

[3] Cui H K , Jian-Wei J I , Zhang D P , et al. Design of Irrigation Monitoring and Control System for Bag Cultivated Tomato in Greenhouse[J]. Water Saving Irrigation, 2017.

[4] Chen J X , Bo LI . Research on regional farmland soil moisture monitoring and precision irrigation technology[J]. Acta Agriculturae Shanghai, 2009.

[5] Soheli S J ,Jahan N , Hossain M B , et al. Smart Greenhouse Monitoring System Using Internet of Things and Artificial Intelligence[J]. Wireless Personal Communications, 2022(14).