ISSN: 2414-1895 DOI: 10.6919/ICJE.202203_8(3).0003

Design of Automatic Drone Hangar in Substation

Xiyuan Chen

Department of Electrical Engineering, North China Electric Power University, Baoding 071000, China

*yizhirikka@qq.com

Abstract

It has become a trend to use drone for automatic inspection in power system. As an important support for drone automatic inspection, drone hangar can meet the timeliness of power system inspection and improve the efficiency. Therefore, in this paper, a substation fully automatic drone hangar for small drone is designed, which uses visual-guided landing algorithm and UWB positioning algorithm. Based on its mechanical structure, a hardware system with STM32F103RCT6 chip as the core control chip is designed, which realizes fully automatic opening and closing of the drone hangar, position correction, remote control and data transmission.

Keywords

Drone Hangar; UAV; Drone; Power System Inspection; Substation.

1. Introduction

Substation, as the hub of power system, undertakes the functions of transforming voltage, collecting current and exchanging power. With the rising demand for electricity in various industries, the number of substations is also increasing. However, once the substation breaks down, it will cause regional power outage at least, and power system splitting at worst, which will bring great losses to the national economy. The efficiency of traditional substation manual inspection is too low and the timeliness is not satisfied [1]. The use of drone inspection can be equipped with a variety of detection equipment, with higher accuracy, higher efficiency of low-altitude and large area inspection, and can operate continuously for 24 hours. Therefore, at present, power system inspection has begun to use drone instead of manual inspection, but the drone also needs to use remote control to control the flight path, and each of the drone has limited battery capacity and can only fly within a limited range. If the manual operation is incorrect, the drone may lose control and run out of power [2].

In view of the low efficiency and short endurance of drone inspection, in this paper, an automatic drone hangar in substation for small drone is designed, which realizes automatic inspection based on drone hangar. The drone hangar has the functions of automatic opening and closing, automatic position correction, remote control, UWB positioning, light indication and emergency power supply, etc.

2. Basic Theory of Drone Hangar Design

2.1 General Structure of Drone Hangar

Based on the requirements of engineering application, the internal structure of drone hangar mainly include drone automatic charging device, hangar power supply device, drone position correction device, apron lifting device and hangar door opening and closing device, etc. [3].

ISSN: 2414-1895 DOI: 10.6919/ICJE.202203_8(3).0003

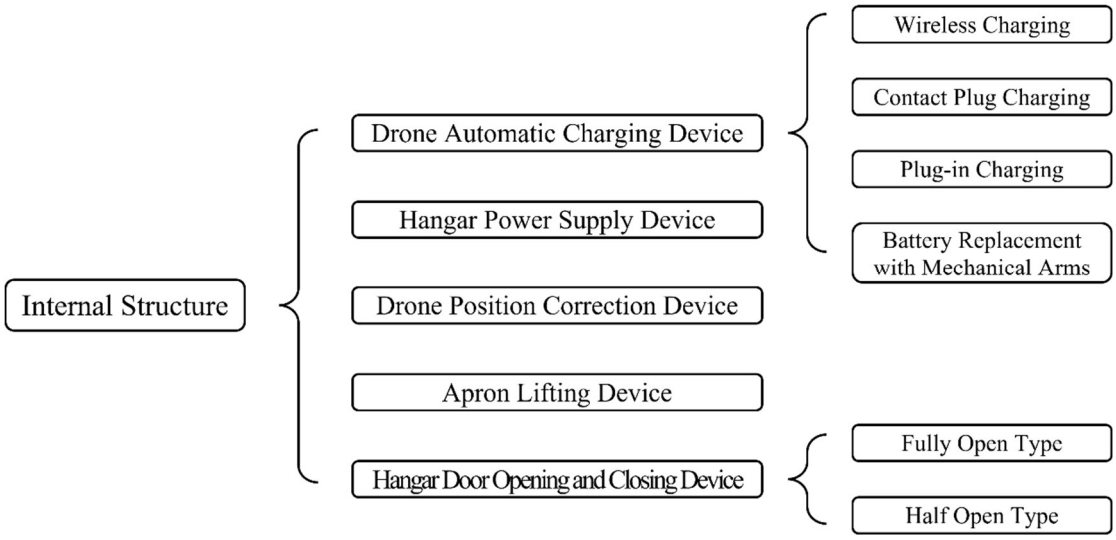

Figure 1. General Structure of Drone Hangar

The drone automatic charging device mainly uses contact plug charging mode. However, contacts contacting charging structures are prone to malfunctions such as poor contact and overheating. Therefore, a plug-in charging device is designed on this basis. The charging electrode is compressed by a spring reed to improve the stability of the contact electrode. With the rise of wireless charging technology, it has also been applied in drone hangar. However, the wireless charging technology is immature and needs further development.

The hangar power supply device is mainly supplied by 220V AC, which is converted into 24V, 12V driving voltage and 5V signal voltage by switching power supply.

The drone position correction device is a mechanical device which automatically pushes the drone landing on one side of the platform into the center of the apron to make up for the precision error of the drone when it lands, and prepares for the drone automatic charging. The drone automatic charging device can be combined with the drone position correction device: positive and negative electrodes are installed on the positioning bars, and the electrodes on the drone and the positioning bars are joined by clamping the positioning bars.

The apron lifting device is mainly used to store the drone and improve the space utilization of the drone hangar. For small drone, the demand for improving space utilization is not high and this device can be omitted for cost savings.

The hangar door opening and closing device is used to create enclosed spaces to prevent rain and dust from entering, which is divided into fully open type and half open type. Most of the hangars use fully open types, while some hangars use half open type like drawers. Although the half open type is not easily waterproof and moisture-proof, it can prevent dust and insects from accumulating in the hangar.

2.2 Drone Landing Algorithm

In the process of drone automatic inspection, the most complex drone control algorithm is the automatic landing algorithm. The drone needs to determine its coordinates in absolute coordinate system, namely ground coordinate system, via an onboard camera or positioning module. Based on the absolute coordinates of the drone, an algorithm is used to control the drone to move to the center of the apron and complete a smooth landing. The design of the hangar in this paper uses a combination of visual-guided landing algorithm and UWB positioning algorithm [4, 5]. Visual-guided landing algorithm is characterized by high positioning accuracy, fast positioning speed and low hardware configuration requirements. It can be used as the main landing algorithm for drone and has high priority. UWB positioning algorithm has a lower positioning accuracy, but it has a higher reliability than visual-guided landing algorithm and is not affected by illumination and surface materials.

ISSN: 2414-1895 DOI: 10.6919/ICJE.202203_8(3).0003

Therefore, it can be used as the auxiliary landing algorithm of drone to correct the errors of visual-guided landing algorithm.

3. Overview of Drone Hanger Design

3.1 Structure Design of Drone Hangar

As shown in the figure 2, the structure of the hangar designed in this paper includes frame, housing, drone position correction device and hangar door opening and closing device. The design scheme is as follows.

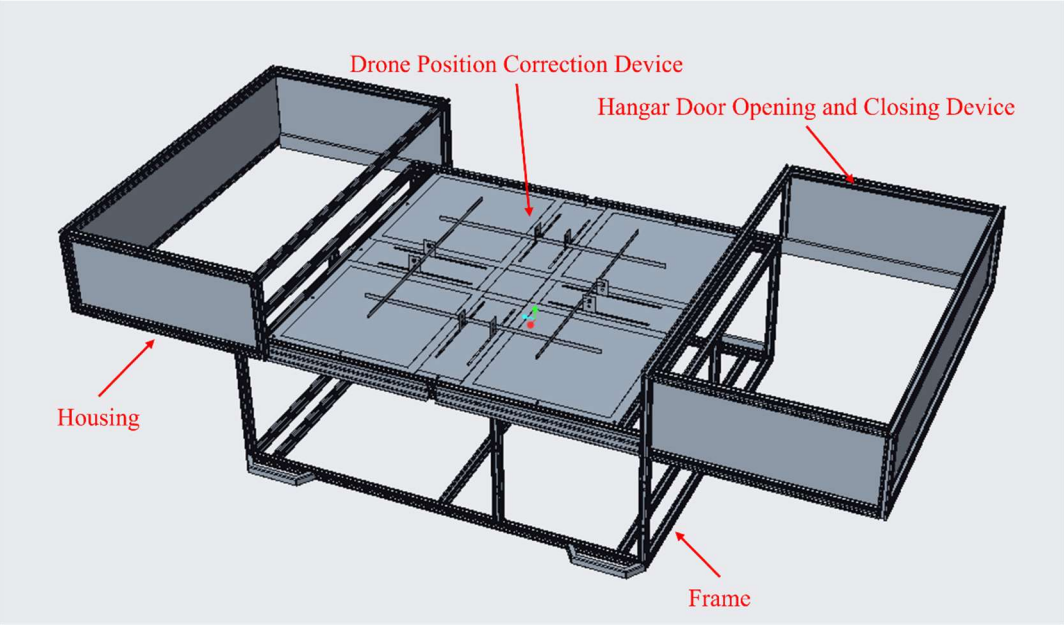

Figure 2. the Structure of the Hangar Designed in this Paper

The role of the frame is to support the entire hangar and drone, so it must have good load-bearing capacity. Aluminum profiles are used as frame materials in the design of this paper for ease of assembly and size adjustment. The housing is made of black acrylic material, which is an ideal prototype material for R&D because of its beautiful quality, low cost and easy processing. The acrylic plate is fixed on the frame by means of connectors.

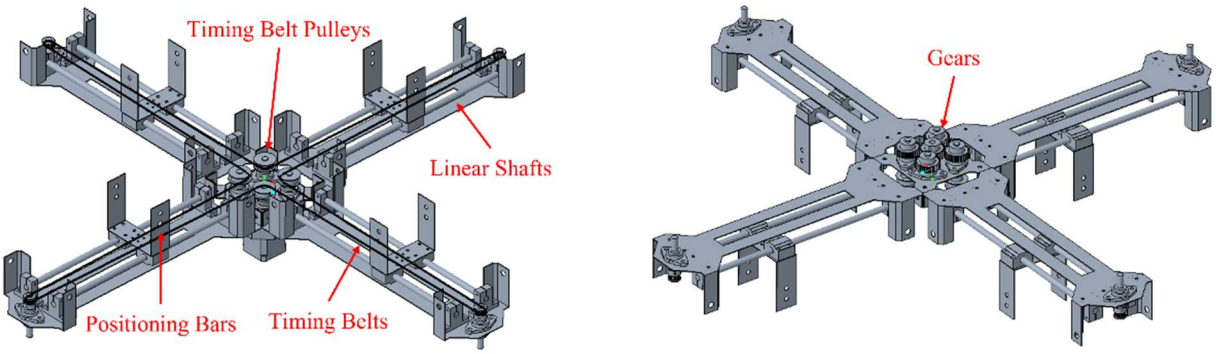

Figure 3. Drone Position Correction Device

The drone position correction device includes the apron frame, the aluminum alloy apron covered on the apron frame, the positioning bars fixed on the apron frame and the corresponding drive mechanism. The whole drone position correction device is fixed on the frame of the hangar and can be

ISSN: 2414-1895 DOI: 10.6919/ICJE.202203_8(3).0003

disassembled as a separate module. This modular design idea is conducive to assembly, dimension adjustment and maintenance. As shown in the figure 3, the drone position correction device is driven by timing belts with gears that are connected coaxially with the timing belt pulleys. Driven by the timing belt pulleys, the timing belts start to move. There are positioning bars fixed to the timing belts so that the four positioning bars can move to the center or around at the same time, thereby pushing the drone to the center of the apron. Pressure sensors are installed on the apron to determine if the drone is landing on the apron.

The hangar door opening and closing device includes hangar doors and drive mechanism. The hangar doors are symmetrical on both sides, and are framed by aluminum profiles, with acrylic plates as housing, which are integrally fixed to the linear guides. The linear guides are fixed on both sides of the hangar frame and installed symmetrically to enhance the load-bearing capacity. As shown in the figure 4, the hangar door opening and closing device is driven by timing belts, which are connected with a stepping motor and driven by the rotation of the motor. The timing belts are secured on both sides of the hangar doors. The movement of the timing belts can drive the hangar doors to slide left and right on the linear guides to open and close. Proximity switches are installed in the limit position on both sides of the hangar doors. When the hangar doors move to the limit position, the proximity switches stop the motor and prevents the timing belts from being pulled off. When the hangar doors move to the closed position, the electromagnets mounted on the doors become magnetized and the doors are locked. Rain guide channels are also provided on the surface of the aluminum profiles. When rainwater falls on the doors, it flows to the side of the hangar through the rain guide channels and does not accumulate on the surface of the doors.

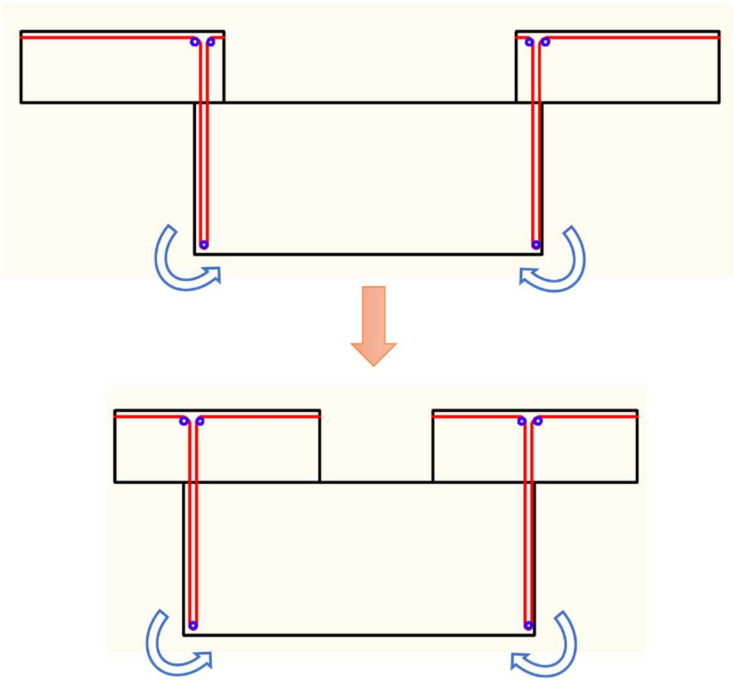

Figure 4. Hangar Door Opening and Closing Device

3.2 Hardware Design of Drone Hangar

A Hardware system of drone hangar is the core part to realize automatic control of hangar. In this paper, STM32F103 chip is used as the core control chip. Pulse signal is generated by STM32F103 chip and input into stepping motor drive circuit, which generates four-phase and four-beat stepping motor drive signal. The chip connects 2.4G wireless communication module and UWB positioning module, realizes wireless communication between the hangar and the upper computer through serial communication protocol, as well as data stream transmission of UWB positioning signal. The chip also connects wind direction sensor, wind speed sensor, temperature sensor and humidity sensor,

ISSN: 2414-1895 DOI: 10.6919/ICJE.202203_8(3).0003

inputs four analog signals to the chip, and converts them to digital signals through A/D conversion function of STM32F103 chip to complete the collection of external information. In order to clearly know the working state of the hangar when remote control, the hangar is also equipped with an indicator system whose different flashing states represent the working state of the hangar. The lighting system in the hangar allows the hangar to land accurately during night inspection.

220V AC supply is used in the design of drone hangar in this paper, which is converted into 24V AC to supply power to large motors such as stepping motors by switching power. The voltage regulator reduces the voltage of 24V to 5V to supply power to weak electric signal systems such as single-chip microcomputer. At the same time, in order to prevent the hangar door opening and closing device from malfunction when the hangar is power-off accidentally, the hangar is equipped with an emergency power supply system with 2000mA battery. When the hangar is power-off accidentally, emergency power is automatically put in to maintain the normal operation of low-power modules such as indicator light module.

3.3 Software Design of Drone Hangar

The software design of drone hangar mainly focuses on the programming of STM32F103 chip. The development of software mainly includes the wireless communication program between the upper computer and the hangar, the drone automatic landing algorithm, the automatic control of the hangar door opening and closing device and the drone position correction device, and control interface of the airborne panel.

Based on NRF24L01 wireless communication module, the program of wireless communication between upper computer and hangar is written. The upper computer communicates with the client computer in serial port, transfers the data received by the upper computer to the client computer, and visualizes the data. The drone automatic landing algorithm uses a combination of visual-guided landing algorithm and UWB positioning algorithm. The main algorithm is visual-guided landing algorithm, and the UWB positioning algorithm is assisted to verify the correctness and rationality of the main algorithm. The control program of the hangar is written in the STM32F103 chip inside the hangar. By analyzing the data packets received by wireless communication protocol, changing the duty ratio of PWM wave output, and then driving the motor to rotate or stop, realizing the automatic opening and closing of hangar doors.

4. Operating Principle of Drone Hangar

When the drone battery is low, it will automatically return to the drone hangar. When the drone arrives near the drone hangar, the drone doors open and the drone lands. After the drone lands, the pressure sensor signals, and the drone position correction device activates and pushes the drone to the center of the apron, and then the hangar doors close. When the hangar doors move to the closed position, the electromagnets mounted on the doors become magnetized and the doors are locked. When the drone receives the work instruction, the electromagnets is demagnetized, the hangar doors open, the drone position correction device activates, and the positioning bars move around, and then the drone can take off. After the drone takes off, the hangar doors close. When the hangar doors move to the closed position, the electromagnets mounted on the doors become magnetized and the doors are locked. A manual operating panel is installed on the right side of the hangar and can be used to control the hangar in an emergency.

5. Conclusion

In this paper, a substation fully automatic drone hangar for small drone is designed, which uses visual-guided landing algorithm and UWB positioning algorithm. The hardware system of drone hangar is based on STM32F103RCT6 chip as the core control chip, which realizes fully automatic opening and closing of the drone hangar, position correction, remote control and data transmission. Substation inspection with this drone hangar can meet the timeliness of inspection and improve the efficiency.

ISSN: 2414-1895 DOI: 10.6919/ICJE.202203_8(3).0003

The results of this paper have important significance for promoting the use of drone for substation inspection and even power system inspection.

References

[1] H.Y. Shangguan, X. Li, T.P. Yang, X.K. Wu and H.T. Jiang, Discussion on the Application Mode of UAV in Substation, Electric Engineering 18 (2021) 138-140.

[2] Q.F. Yang, Z.R. Li, H.Z. Ma and J.W. Xin, The UAV Honeycomb Empowers Power Inspection, Mechanical Research & Application 06 (2020) 167-169.

[3] H.R. Wang, Q. Song and L. Wang, Research Status and Development Trend of UAV Hangar, Proceedings of 2019 World Transport Convention (Part 2), Beijing, 2019, pp. 451-460.

[4] B.Y. Zhang, Application of Ultra Wideband Technology in Multi Rotor UAV Automatic Airport, Engineering and Technology Research 13 (2020) 111-112.

[5] C.Y. She, G.X. Wu, J.Z. Zhang, X.Y. Ji and D.L. Qi, Research on Substation UAV Inspection Technology Based on UWB and Image Recognition, Automation & Instrumentation 06 (2020) 36-41.