ISSN: 2414-1895 DOI: 10.6919/ICJE.202210_8(10).0017

Diesel Engine Fault Diagnosis based on DT-CWPT and RBF Neural Network

Jinyu Sun

School of Huaiyin, Normal University, Huaian 223001, China

Abstract

Aiming at the large amount of vibration signal and data redundancy on the cylinder head of diesel engine, this paper uses DT-CWPT to process the acquired signal, including data denoising processing and feature vector extraction. After the wavelet decomposition is collected, the dimension of the signal is reduced, and the excess signal components can be filtered out, the fault features are highlighted, and the information contained in the signal is not damaged, and the accuracy of the fault diagnosis is improved; the RBF neural network has an excellent mode. Recognition performance, relative to the neural network has a rapid diagnosis ability; particle swarm optimization algorithm to optimize the RBF neural network basis function, can improve the diagnostic speed of RBF neural network. Finally, the research is applied to the actual experiment to verify the superiority of the method.

Keywords

Diesel Engine; DT-CWRT; Particle Swarm; RBF Neural Network.

1. Introduction

With the continuous development of industry, mechanical equipment fault diagnosis monitoring and fault diagnosis technology is getting more and more attention. As a reciprocating power machine, the diesel engine's internal structure failure will affect the diesel engine's excitation characteristics and transmission, and the diesel engine's Vibration and noise signals are present, vibration signals are easy to measure, and early prediction and online monitoring are easy to implement. The domestic and foreign scholars have shown that the vibration signal of the cylinder head of the diesel engine is directly related to the state of the cylinder. By using the cylinder head vibration signal to diagnose the diesel engine online, the diesel engine fault can be judged in advance, the occurrence of production accidents can be reduced, and the maintenance cost can be reduced.

The internal structure of the diesel engine is complex, and there are many excitation sources, such as the internal combustion and explosion vibration, the impact vibration of the valve, the fluid flow vibration, the meshing vibration of the transmission member, and the natural vibration of the body and various components, etc., which cause the vibration and noise of the diesel engine. The resulting vibration information includes various components and disturbances and is a typical periodic, non-stationary vibration signal. Therefore, the method of extracting the vibration signal characteristics of diesel engine is the advance of fault diagnosis. The vibration signal processing and feature extraction have been divided into time domain analysis, frequency domain analysis, time-frequency analysis and fractal geometry after years of development. Time domain analysis can only extract peak and variance waveform factors. These features can be directly measured and have no sensitivity to non-stationary signals. In frequency domain analysis, Fourier transform is commonly used, and frequency domain analysis can be effective. The amplitude spectrum of the fault is extracted and the energy of the edge spectrum band energy; the time-frequency analysis has EMD decomposition, wavelet transform, etc.; in the above signal analysis method, the characteristics of the diesel engine can only

ISSN: 2414-1895 DOI: 10.6919/ICJE.202210_8(10).0017

be reflected from one aspect, and the wavelet transform can extract the vibration signal Medium time domain, frequency domain, time-frequency domain features, time-frequency localization, fast multi-channel bandpass filtering, multi-resolution, etc., suitable for complex non-stationary signal analysis in diesel engine cylinder heads. After extracting the fault features, the particle swarm optimization is used to abstract the parameters into a massless particle, which is used to represent a feasible solution to the problem, to find the optimal and solve the problem.

In this paper, we use the vibration sensor on the cylinder head to collect the vibration signal, denoise the vibration signal through the DT-CWPT, and extract the useful characteristic parameters. After the extracted characteristic parameters are optimized by the particle swarm RBF The neural network performs fault identification, which greatly improves the accuracy of fault diagnosis and reduces the diagnosis time.

2. Signal Acquisition

Diesel engine cylinder is the core of diesel engine operation, and it is the source of power output. Other mechanisms are closely related to the cylinder. The cylinder head vibration signal contains rich information on the operating state of the diesel engine, reflecting the combustion state inside the cylinder and also reflecting The working state of the intake system and the fuel supply system. The vibration signal is easy to extract and can realize the advantages of online monitoring.

In this paper, the sampling rate is synchronized with the speed by synchronous sampling, which can highlight the correlation between signal and speed. According to the diesel engine design vibration signal acquisition system of this study, as shown in Figure 1, the acceleration sensor is installed on the top of the cylinder head and then passed. Photoelectric sensor mounted on the output gear shaft, real-time monitoring of the speed, obtained by the A/D converter, the sampling frequency at the corresponding speed.

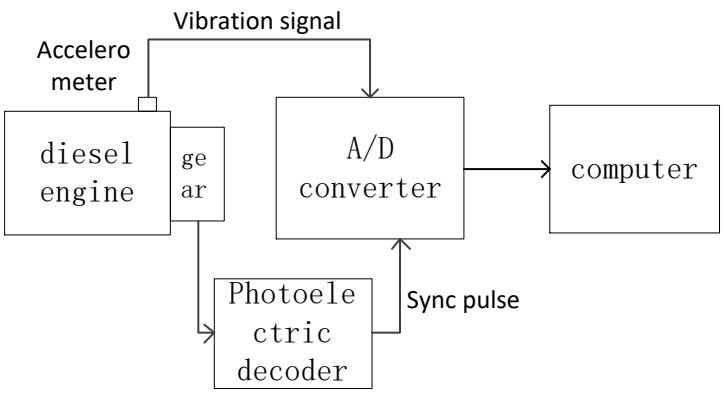

Figure 1. Diesel vibration signal equal angle synchronous sampling system

The spatial sampling interval is related to the sampling frequency:

$$\Delta s = \frac{\omega}{f_s} \tag{1}$$

Where is the angular velocity unit of the crankshaft is rad/s.

A four-stroke diesel engine has a duty cycle of two weeks (4π), and the sampling point of each working cycle is:

ISSN: 2414-1895 DOI: 10.6919/ICJE.202210_8(10).0017

$$K = \frac{4\pi}{\Delta s} \tag{2}$$

If the speed is n(r/min) , then:

$$f_s = \frac{nK}{120} \tag{3}$$

3. Denoising of DT-CWPT and Extraction of Characteristic Parameters

3.1 Adaptive Block Threshold Noise Reduction Method

Firstly, the signal is decomposed into a DT-CWPT, and the number of layers to be decomposed is set. The coefficients of the decomposition of the DT-CWPT are arranged from left to right to obtain a set of observation data X.

Selecting parameters λ and L with an optimization algorithm to minimize the unbiased estimate $SURE(x,\lambda,L)$. Using the solved parameters λ and L to perform threshold operations on the corresponding observation data, $\hat{\theta}_{ij} = \beta_{ij} \bullet \omega_{ij}$, L is the length of the field S_i at the time of threshold processing; the DT-CWPT reconstruction is performed by the coefficient processed by the noise reduction threshold value, and the analysis signal after noise reduction is obtained.

3.2 Extraction of time domain features

The extraction of the time domain special diagnosis parameters of the signal can obtain the change of the amplitude of the signal, the magnitude of the fluctuation, and the energy distribution; the characteristics of the dimensional statistics will change with the change of the working conditions of the equipment, resulting in difficulty in distinguishing. The statistics of the special diagnosis parameters, these parameters are sensitive enough to the equipment operating state, but not sensitive to other factors than the operating state.

1) Shape factor

$$S_x = \frac{X_{ev}}{\bar{X}} \tag{4}$$

Measure the relative strength of the signal and the mean.

2) Impulse factor

$$I_x = \frac{\max\limits_{i=1}^{2^M} |x[i]|}{\bar{X}} \tag{5}$$

Measure the relative strength of the signal peak and the average functional power.

3) Crest factor

$$C_x = \frac{\max\limits_{i=1}^{2^M} |x[i]|}{X_{ev}} \tag{6}$$

ISSN: 2414-1895 DOI: 10.6919/ICJE.202210_8(10).0017

Measure the relative strength of the signal peak and the average functional power.

4) Skewness

$$\alpha=\frac{1}{2^M}\sum_{i=1}^{2^M}(\frac{x[i]-\bar{X}}{\sigma_x})^3=\frac{\frac{1}{2^M}\sum_{i=1}^{2^M}(x[i]-\bar{X})^3}{\sigma_x^3} \tag{7}$$

The asymmetry of the probability density function of the signal amplitude is measured.

5) Kurtosis

$$K_x=\frac{1}{2^M}\sum_{i=1}^{2^M}(\frac{x[i]-\bar{X}}{\sigma_x})^4=\frac{\frac{1}{2^M}\sum_{i=1}^{2^M}(x[i]-\bar{X})^4}{\sigma_x^4} \tag{8}$$

To measure the degree to which the signal deviates from the Gaussian distribution, the Gaussian distribution signal has a kurtosis value of 3.

6) Clearance factor

$$CL=\frac{\max_{i=1}^{2^M}|x[i]|}{X_{sra}} \tag{9}$$

Measure the relative size of the peak and unit square root magnitudes.

3.3 Frequency Domain Feature Extraction

The cylinder head vibration signal essentially reflects the impact of the combustion gas pressure shock of the whole machine, the opening and closing of the exhaust valve, and it is difficult to analyze the characteristic frequency of the corresponding fault from the vibration excitation or mechanism, and the shock frequency response distribution of each mechanism of the diesel engine. In different frequency bands, wavelet transform matches the local characteristics and energy distribution of signals from time domain and frequency domain. The relative energy of each frequency band becomes the most common and effective method for feature extraction of diesel engine vibration signals. The DT-CWPT transform has translation invariance, which can effectively suppress the signal energy oscillation of the traditional wavelet transform at various scales, accurately decompose the original vibration signal into different frequency bands, and extract the band energy characteristics from the decomposition coefficients. Better reflect the operating characteristics of the diesel engine.

According to the wavelet architecture principle, when the wavelet basis function $\{\phi_{j,k}(t)\}$ is a set of orthogonal basis functions, the energy after wavelet transform is conserved, that is:

$$\sum_{j=-N}^{-1}|<x(t),\phi_{j.k}(t)>|^2=\|x\|^2 \tag{10}$$

The conservation of energy in wavelet transform is the theoretical basis for band energy feature extraction.

ISSN: 2414-1895 DOI: 10.6919/ICJE.202210_8(10).0017

The wavelet energy at a single scale is the sum of the squares of the wavelet coefficients at this scale:

$$E_j = \| r_j \|^2 = \sum_{i=1}^{2^M} x_j^2[i] \tag{11}$$

From this, the N-layer decomposition of the wavelet packet is deduced, and the expression of the total energy is:

$$E_{sum} = \| S \|^2 = \sum_j \sum_k | C_j(k) |^2 = \sum_j E_j, \; j = 1, 2, ..., 2^N \tag{12}$$

Relative energy:

$$e = \frac{E_j}{E_{sum}} \tag{13}$$

The normalized relative energy is obtained, and the j-th layer energy eigenvector is obtained.

$$\upsilon = (e_1, e_2, ..., e_{2N}) \tag{14}$$

4. Fault Diagnosis of RBF Neural Networks based on Particle Swarm Optimization

The general idea of neural network applied to fault diagnosis is to obtain the process parameters of the device under set fault and no fault, and normalize it into network input; then use the known data to train the weight parameters of the neural network. The next step is the performance test of the neural network. The input symptom vector is output, and the output data is processed to obtain the fault result. Figure 2 is a troubleshooting flowchart.

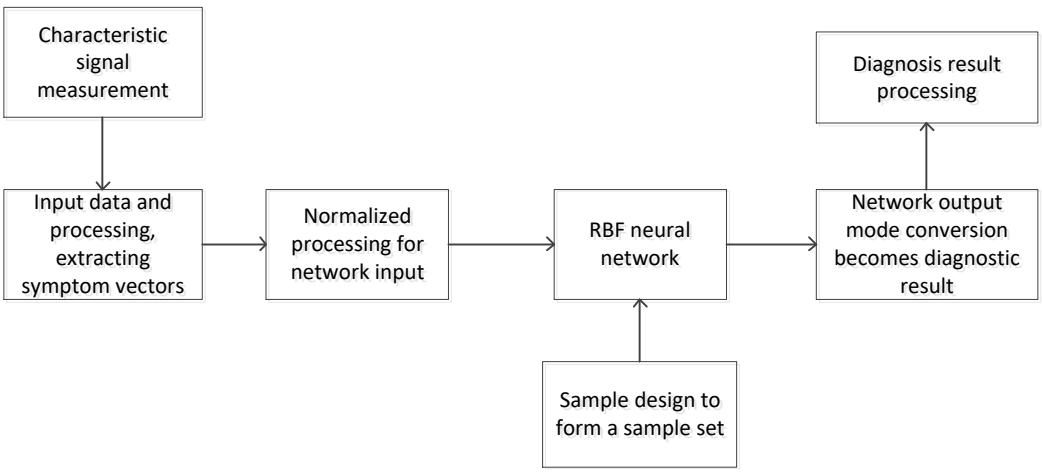

Figure 2. Troubleshooting flowchart

In the diesel engine failure, the state of the system is often judged by some dynamic eigenvalues, usually using a combination of time domain and frequency domain eigenvalues. Among the

ISSN: 2414-1895 DOI: 10.6919/ICJE.202210_8(10).0017

characteristic parameters of time domain and frequency domain, Impulse factor, Shape factor, Kurtosis, Clearance factor and energy index are selected as input variables for fault diagnosis. In the diagnosis process, in order to make the experimental data comparable, the data will be normalized. The commonly used normalization formula is:

$$x_i = \frac{x_i - x_{\min}}{x_{\max} - x_{\min}} \tag{15}$$

In the formula, x_i represents the i-th normalized feature value, and $x_{\max}, x_{\min}$ represents the input maximum value and the minimum value, respectively. Part of the training and test data obtained from the experiment are shown in Table 1.

Table 1. Test sample data

State	Impulse factor	Skewness	Kurtosis	Clearance factor	Energy
1	0.4345	0.3971	1.0000	0.5387	0.8760
2	0.3456	0.2384	0.7648	0.9745	0.3453
3	0.2345	0.3673	0.2865	1.0000	0.5341
4	0.1533	0.0098	0.1453	0.0156	0.1533
5	0.4874	0.7639	0.4434	0.7087	0.4874
6	0.3956	0.4225	0.3130	0.4177	0.3956
7	0.3874	0.0034	0.6784	0.0235	0.3874
8	0.4036	0.5672	0.1245	0.5146	0.4036
9	0.3293	0.3784	0.2789	0.3124	0.3293
10	0.1273	0.0238	0.5467	0.0289	0.1273

In this paper, the number of input layer neurons is 5, which are pulse index, waveform index, kurtosis index, margin index and energy index. The number of neurons in the output layer is 1. Create a neural network with newrbe, which automatically selects the number of hidden layer nodes so that the error is zero.

$$spread = 1.5 \tag{16}$$

$$net = newrbe\left(P, T, spread\right) \tag{17}$$

where P is the input vector, T is the target vector, and spread is the distribution density of the radial basis function. The larger the value, the smoother the function.

The code to verify the predictive performance of the neural network is $y = sim(net, test)$, where $test$ is the test sample for the neural network. From the test results, it can be concluded that the cylinders

ISSN: 2414-1895 DOI: 10.6919/ICJE.202210_8(10).0017

of the diesel engine are in normal working condition, which is consistent with the actual diesel engine state. It can be seen that the accuracy and prediction effect of the neural network are ideal.

The input variables that construct the neural network are the symptom variables that distinguish various faults. The output variables are the fault locations and causes that may occur in the turbocharged system. After determining the input variables and output variables, the particle swarm improved RBF neural network learning algorithm is used to diagnose common faults of the device.

The particle swarm optimization RBF neural network fault diagnosis algorithm is described as follows: Neural network initialization based on particle swarm optimization. Initialize the basic parameters of the particle swarm optimization neural network, including learning factors, particle swarm velocity, location, and so on. The fitness value of RBF neural network based on particle swarm optimization. Create a neural network and get the optimal fitness value by calling the fitcal function. Calculation of neural network particle velocity and position. RBF neural network particle fitness value update. The process of particle swarm optimization neural network can be regarded as the fitness value update. When the mean square error of RBF neural network can not meet the requirements, the particle swarm determines the position based on the mean square error, saves it and recalculates it. position. Velocity and location update of RBF neural networks based on particle swarm optimization.

5. Test analysis

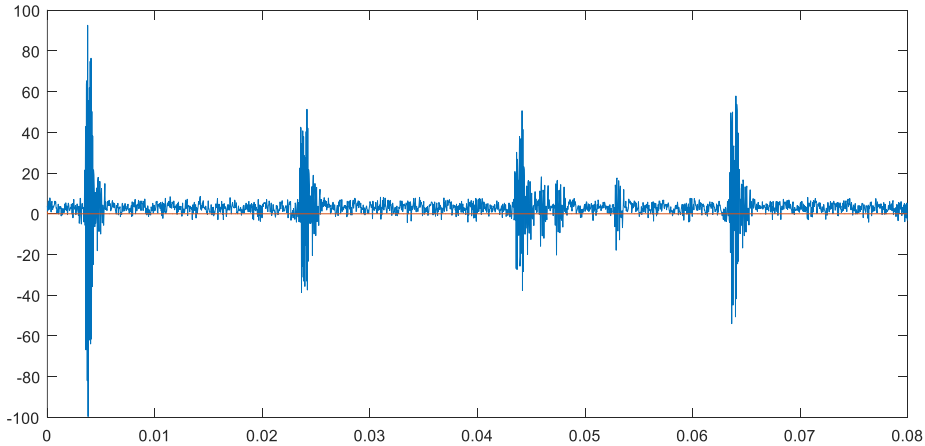

Figure 3. Cylinder head measured vibration signal

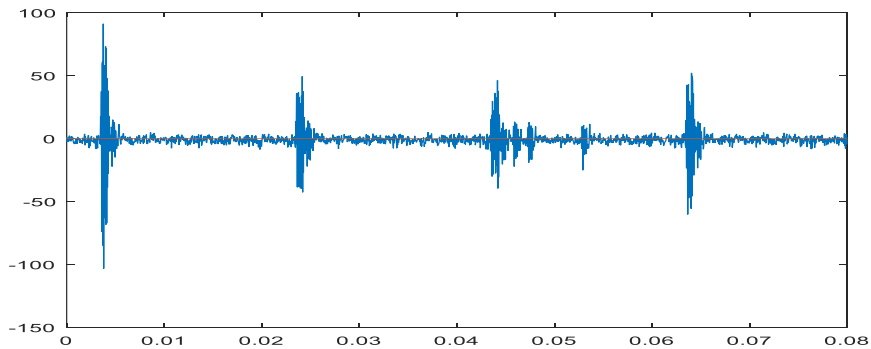

Figure 4. Noise-reduced signal

The operation of the diesel engine is accomplished by four processes: intake, compression, combustion expansion, and exhaust. These four processes constitute a work cycle. According to the

ISSN: 2414-1895 DOI: 10.6919/ICJE.202210_8(10).0017

working law of the diesel engine, the stress generated by the intake pressure, compression stroke and power stroke of the cylinder acts on the cylinder head according to the working law of the diesel engine. For the interval of one working cycle of the diesel engine, the first section is generated when the combustion bursts. The second section is the fluctuation of the diesel engine during exhaust; the third section is the stress that opens the intake air when the diesel engine is in intake; the fourth section is the response generated by the compression after the intake. Therefore, the four stages of the diesel engine work are separated in time to study the characteristics of the signal. Figure 3 shows the surface vibration data of the 1# cylinder head when the diesel engine is running at a speed of $1200r/\min$ and the sampling frequency is $30KHz$. When the signal is decomposed and reconstructed by double-tree complex wavelet packet, it should be reconstructed with 3 layers to 5 layers. Too many decomposition layers are not enough to eliminate low frequency interference; if the number of decomposition layers is too small, it is easy to eliminate useful information. Here, the three-layer decomposition is performed, and the coefficient is set to zero. The reconstructed signal will be as shown in Fig. 4. It can be seen that the whole machine vibration and other low-frequency interference are filtered out, which can better highlight the state information of the working cylinder.

In order to reflect the superiority of neural network based on particle swarm optimization, the original training sample set is used to train the original neural network and particle swarm optimization neural network, and the test data is input into two neural networks respectively. Contrast, as shown in Table 2. The RBF neural network test results based on particle swarm optimization and the original RBF neural network test results are shown in Table 3 and Table 4, respectively.

Table 2. Comparison of ideal output and actual output

Test sample	Ideal output	Actual output
20	1	0.9813
22	1	1.0131
24	1	1.0417

Table 3. Diagnostic Results of BRF Neural Network Based on Particle Swarm Optimization

Output result					Fault type
0	0.97541	-0.0254	0.03214	0.0045	F2 serious failure
0	-0.0045	0.0245	1.02365	-0.0014	F3 medium failure
0	-0.0235	0.5236	0.0047	-0.0002	F4 serious failure

Table 4. Original BRF neural network diagnosis results

Output result					Fault type
0	0.9905	-0.0354	0.0121	0.0135	F2 serious failure
0	-0.0086	0.0175	1.0435	-0.0024	F3 medium failure
0	-0.0012	0.3986	0.0023	-0.0012	F4 serious failure

It can be seen from Tables 3 and 4 that both neural networks achieve rapid training and accurate diagnosis of faults. However, comparing the two neural networks, it can be seen that the neural network diagnosis by particle swarm optimization is more accurate.

ISSN: 2414-1895 DOI: 10.6919/ICJE.202210_8(10).0017

6. Conclusion

The vibration signal collected on the cylinder head of the diesel engine is decomposed by wavelet, which effectively reduces the noise signal, ensures the accuracy of the signal, and reduces the influence of the noise signal on the vibration fault diagnosis of the RBF neural network algorithm.

After a large number of experimental test samples, it is proved that the optimized RBF neural network has higher accuracy for fault diagnosis and low false positive rate. The vibration signal is effectively decomposed by the wavelet decomposition to reduce the vibration signal of the diesel engine cylinder head, which ensures the accuracy of the state signal and reduces the RBF neural network algorithm for the diesel engine vibration fault diagnosis due to noise interference. The optimized RBF neural network is used in diesel engine fault diagnosis, and it is found that the optimized RBF neural network has higher accuracy for diagnosis.

References

[1] CAO Long-han,CAO Chang-xiu,SUN Ying-kai. State and Prospects of Diesel Engine Fault Diagnosis Technique[J]. Journal of Chongqing University, 2001, 24(6):134-138.

[2] CHENG Rui-qi,CUI Jian-jun. Characteristic Analysis of Spectrographic Oil Data and Fault Diagnosis for Diesel Engines[J].Mechanical Science and technology, 2000, 41(2):289-294.

[3] CHEN Bao-jia,LI Li,ZHANG Yuan. Application of Scale Wave Power Spectrum to Fault Diagnos is of Internal Combustion Engine[J]. Transactions of CSICE, 2006, 24(3):284-287.

[4] QIAN Shu-hua,WANG Xin-qing,LI Huan-liang. Application of Quadric Time-Frequency Distribution to Mechanical Fault Diagnosis[J]. Journal of Southwest Jiaotong University, 2003,5(38): 578-580.

[5] Cao Jian-jun,Zhang Pei-lin, Zhang Yin-tang. Feature Extraction and Optimal Selection Algorithm of the Vibration Signal of an Engine Cylinder Head[J]. Mechanical Science and Technology for Aerospace Engineering,2008, 9(9):1199-1206.

[6] CHEN Hua-li,LIU Kang,CHENG Geng-guo. Study and Simulation on Signal Adaptive De-noising Method[J]. Computer Simulation,2011, 28(1):344-387.

[7] DENG Jun, Wang Jing. On Fault Diagnosis for Diesel Engines Based on Correlation Dimension of Diesel's Vibration Signals[J]. Ship & ocean engineering,2009, 38(1):36-38.

[8] FAN Jin-yu, HUANG Jia-liang. Application Research of Neural Network Technology in Online Diagnosis of Marine Diesel Engine Faults[J]. China ship repair,2006, 25(6):49-52.