ISSN: 2414-1895 DOI: 10.6919/ICJE.202109_7(9).0013

Design of Intelligent Stepping Cellar System based on BP Neural Network

Fan Ye*, Ding Xu

College of Mechanical Engineering, Sichuan University of Science & Engineering, Sichuan China.

*achievement99@163.com

Abstract

In view of the fact that the traditional liquor brewing manual stepping on the cellar heavily relies on the operator's sensory cognition and experience accumulation, it has the problems of instability, unhygienic, large manpower requirements, and difficulty in integrating with intelligent winemaking equipment. This project intends to develop a set of automatic scalping. Pedaling, and can integrate the collected information through BP neural network algorithm according to the pressure, temperature, humidity, acidity, and oxygen content of the mash, and automatically adjust the pedaling strength, range, working mode and other functions. The intelligent pit-stepping system is based on the optimal conditions in the fermentation process for online evaluation and intelligent monitoring, and uses automated equipment to simulate the manual pit-stepping process to realize the digitization and standardization of the indicators for the pit-stepping of fermented rice.

Keywords

Intelligent; Stepping Cellar; BP Neural Network.

1. Introduction

First of all, when designing the intelligent stepping cellar device, we understand that the purpose of stepping cellar is to create an anaerobic environment and ensure the metabolism of yeast. After the grains entered the pit, during the fermentation process, the volume of fermented grains decreased and sank, and the tightness of the pit mouth was reduced, resulting in cracks. The pit stepping was to repair the tightness, so as to achieve an environment with less oxygen content. According to trample kiln process, after being fermented material into the cellar, timely and smooth, tight, loose on both sides, according to the indexes, such as temperature, oxygen content, proper pressing, so as to avoid the fermentation materials saved too much air, easy cause microorganism aerobic respiration, pits to heat up in hard, lactic acid blooms cause "pit", affect the yield and quality of wine [1]. Innovation points of this paper: 1. Build digital stepping cellar system, research and develop central control system, realize visualization, controllable, unmanned stepping cellar. 2. For each process, an intelligent cellar stepping model is established to realize automatic adjustment of brewing process parameters according to online monitoring data. 3. Research and development of brewing equipment integrating information, automation and intelligence, initially realize the standardization of brewing and improve liquor brewing quality.

ISSN: 2414-1895 DOI: 10.6919/ICJE.202109_7(9).0013

2. Overall evaluation of intelligent cellar stepping device

2.1 High precision pressure detection and evaluation of grains

After pit entering, there were special requirements for smoothness, evenness, looseness and other aspects of fermented grains. Too tight, too loose, and uneven pit stepping would adversely affect the oxygen content and nutrient distribution in fermented grains in the pit, ultimately inhibiting microbial metabolism, reducing fermentation quality and affecting the yield of wine [2]. Therefore, the inspection and evaluation of the fermented grains pressure testing system is the basis for the evaluation of the pit entry index and trampling process of fermented grains. How to improve the testing accuracy of the fermented grains pressure testing system and develop high-performance intelligent testing equipment suitable for the evaluation of the porosity of distilled grains are the key issues to be solved first in this project.

2.2 Measuring system for temperature, humidity, acidity and oxygen content of grains

During the fermentation of fermented grains, the temperature, humidity, acidity and oxygen content of fermented grains were the main parameters affecting liquor yield [3], A real-time automatic monitoring system is designed. The signals measured by multi-sensor data fusion technology are collected. The signals are completed by the multi-channel multi-parameter system through the analog-to-digital converter, and the final input is controlled by the single chip microcomputer. In addition, curve graphs of temperature, humidity, acidity, oxygen content and other indicators in the fermentation process of fermented grains were drawn, and certain thresholds were set according to the evaluation criteria of pit stepping process to control the temperature, humidity, acidity and oxygen content of fermented grains in a stable range [4].

2.3 Coupling relationship between pressure, temperature, humidity, acidity and oxygen content of fermented grains and trampling control system and feedback control method

Machine simulation of manual cellar stepping operation is the core of the product development of this project. How to design automatic cellar stepping hardware equipment and testing equipment in line with the operation of special brewing workshop, and how to accurately control the trampling and scraping actuators to carry out stable and efficient cellar stepping operation according to the manual cellar stepping process? In addition, the intensity, scope and working mode of pit stepping operation were adjusted in real time according to the feedback information provided by the measurement system for fermented grains entering pits [5], which was another major key technical problem to be solved in this project.

3. Step on the design route of the cellar device

3.1 Mechanical design and realization of automatic scraping and trampling actuator

R&d according to size, and distilled grains pressure distilled grains, such as temperature, humidity, acidity, oxygen index to adjust trample intensity, scope, operation mode of automation trample, leveling actuators and ancillary equipment, including simulation feet trample, tooth plate, improve leveling controller, control cabinet, the body of revolution, quick change components, motor control system, And mechanical design and manufacture of auxiliary components. Combined with multi-sensor data fusion technology, hardware equipment research and development of machine simulation of manual cellar stepping process was realized [6].

According to the winery on kiln process, when the fermented grains in a cellar pool, presents the pile shape, and a third in the fermented grains filling pits for, need things upon the heap of fermented grains for leveling operation, and then continue to fermented grains pits two-thirds, leveling and then fermented grains for operation, and then continue to fermented grains filled cellar pool, and then fermented grains and cellar ChiJiPing leveling, finally cover the encapsulation pits. This design is based on the cellar process, the design of scraper star shape scraping mechanism, and the design of mechanical mechanism for lifting, rotation operation, and through the driving mechanism before, after, left, right movement.

ISSN: 2414-1895 DOI: 10.6919/ICJE.202109_7(9).0013

3.2 The porosity between grains was calculated by high precision pressure testing system of grains

Through the integration of the new high-precision pressure sensor and the stepping pit control system, including sensor packaging integration, signal acquisition and conditioning circuit design, software driven development, etc., the fermented grains pressure detection system was developed to evaluate the porosity of fermented grains and the online fermented grains detection system. Based on the new high-precision pressure sensor, A device was developed to detect the pressure of fermented Grains Institute in real time and adjust the pressure of the trampling system in real time [7].

3.3 Measuring system for temperature, humidity, acidity and oxygen content of grains

To monitor temperature, humidity, acidity of fermented grains fermentation process, such as oxygen index, design a real-time automatic monitoring system including the measurement and control subsystems of MCU, multi-channel multi-parameter, fermentation parameters measured by the multi-sensor data fusion technology, the process is mainly composed of multi-sensor data fusion detection, through the wireless sensor network (WSN) to signal transmitter, Then the corresponding information of the multi-channel multi-parameter intelligent subsystem is input to the wireless signal transmitter and sent to the computer control system with the wireless signal receiver at the receiving end. The signal acquisition of multi-sensor data fusion technology is completed by the multi-channel multi-parameter system through the analog-to-digital converter, and the final input is controlled by the single chip microcomputer. In addition, curve graphs of temperature, humidity, acidity, oxygen content and other indicators in the fermentation process of fermented grains were drawn, and the most appropriate indicators were set by evaluation of the final liquor production quality [8]. Its software design is shown in Figure 1:

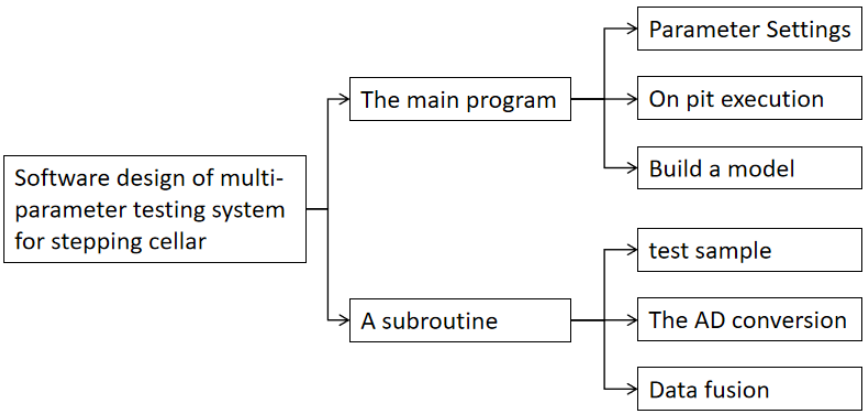

Figure 1. Step cellar software system

3.4 Research and development of intelligent stepping cellar control system

Based on the artificial stamp on process evaluation, use distilled grains pressure size, and distilled grains, such as temperature, humidity, acidity, oxygen index, the index and distilled grains for pit entry stamp on coupling relationship of the control system, based on the distilled grains pressure size, and distilled grains, such as temperature, humidity, acidity, oxygen index assessment data, automatically adjust the operating strength, scope and trample work mode, The effect and process of pit stepping were accurately controlled to finally realize the digitalization and standardization of pit stepping indexes of fermented grains [9].

4. System composition

Multi-channel data parameter intelligent acquisition system [10]: includes the signal acquisition of various analog variables such as temperature and humidity, and performs fusion processing of the collected information through BP neural network algorithm to reduce the error. Data is received and transmitted through the wireless data transceiving subsystem.

ISSN: 2414-1895 DOI: 10.6919/ICJE.202109_7(9).0013

Wireless transmission system: using the wireless data transmission module to transmit the output data of the wireless data transceiver system for stable and reliable remote transmission.

Upper computer: cooperate to control the work of each subsystem, and real-time display of each parameter index. The upper computer compares the data received with the set value of the step cellar process, and then controls its step cellar actuator to perform its operation.

Each subsystem is shown in Figure 2:

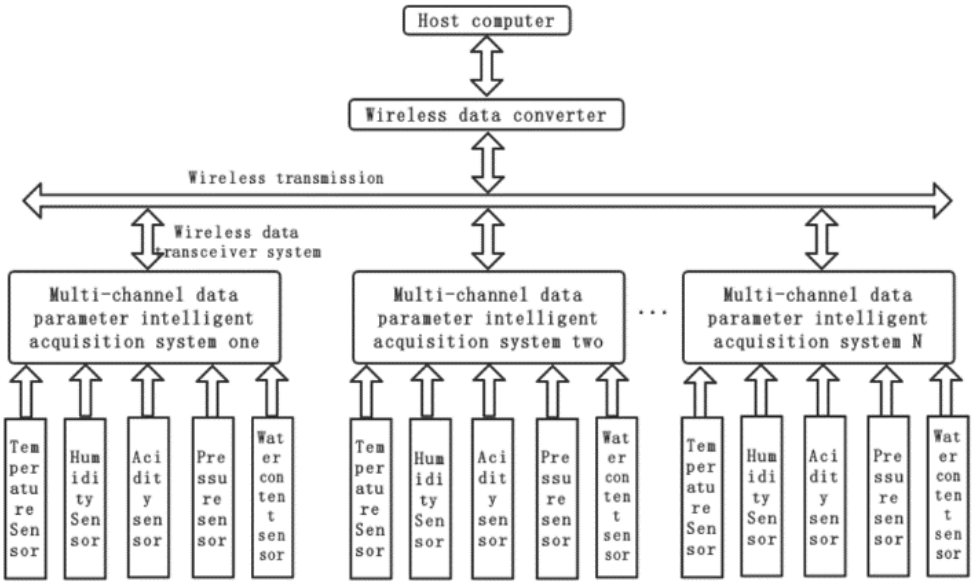

Figure 2. Stepping cellar control system

5. Technical route

5.1 Measuring system control scheme

In order from bottom to top, this system mainly includes measurement sensor group, multi-channel data parameter intelligent acquisition system, wireless data transceiver system, wireless transmission system, wireless data converter, CENTRAL processing unit, monitor, actuator and user interface [11]. As shown in Figure 3:

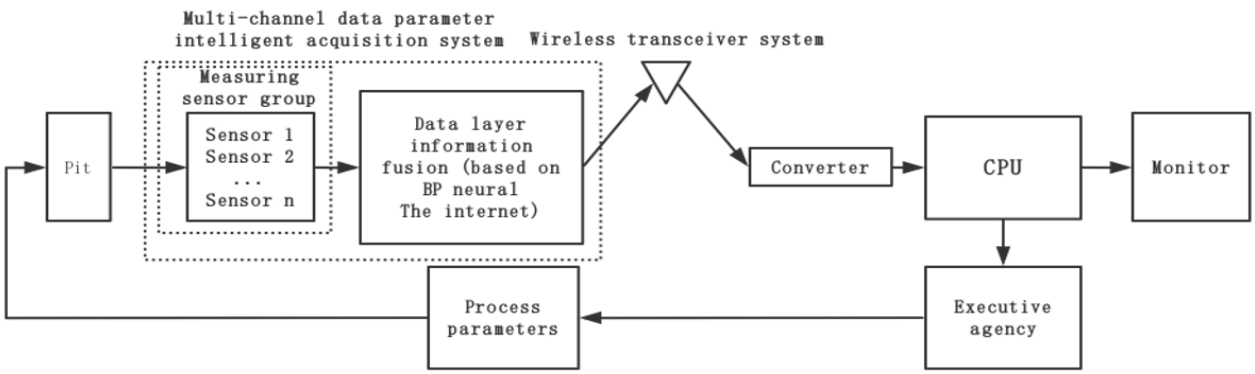

Figure 3. Measurement control system

5.2 Research and development of automatic trampling hardware and control system

Automation trample, leveling actuators is intelligence on hardware foundation pit system, its on pit work performance directly related indicators of distilled grains for pit entry, has important influence

ISSN: 2414-1895 DOI: 10.6919/ICJE.202109_7(9).0013

on the subsequent fermentation environment, research and development of automation trample, actuator and control system, leveling machine simulation on artificial cellar technology hardware equipment, is the project need to first solve the problem [12]. When designing intelligent pit stepping hardware equipment, the following requirements should be mainly considered [13]: 1) Parameters such as the force, range and working mode of pit stepping operation can be adjusted, and operating parameters can be adjusted in real time according to fermentation processes of different wine categories and characteristics of fermented grains type to achieve the optimal pit stepping effect; 2) It is necessary to integrate the high-precision testing and evaluation system for fermented grains pressure detection system, which can detect and evaluate the effect of pit stepping in real time online, and adjust the intensity, scope and working mode of pit stepping operation in real time according to the evaluation feedback data; 3) Certain thresholds were set according to the evaluation criteria of pit stepping process to control the temperature, humidity, acidity and oxygen content of fermented grains in a stable range. 4) It is necessary to comprehensively consider the special working environment and operating characteristics of the brewery production workshop, and have excellent professional performance in terms of stability, self-cleaning, efficiency and safety; 5) The system can be integrated with the existing intelligent starting and entering system, so as to form a real full-production line and integrated intelligent brewing [14]. The intelligent stepping cellar equipment is composed of stepping simulation feet (stepping blocks), scraping gear plate, lifting controller, multi-sensor group detection system, control box, rotating body, quick change component, motor control system and other components [15]. Among them, the simulated feet were distributed at the bottom of the whole tramping mechanism, directly contacting with the fermented grains. There were six treadles in total, and they were divided into two groups. The simulated feet controlled the tramping operation by gravity drop. The top of the trapeze block is connected with the control box through the wire rope, and its advantage is that the trapeze block can imitate the artificial trapeze way as far as possible. Under the trample block out the bottom of the box body surface, lifting through intelligent traffic with enclosure, impetus trample synchrolifting lifting, imitating human trample, the trample block at the bottom of the distilled grains to trample, compaction cellar pool of distilled grains, oxygen expelled most of the pits, guarantee the normal metabolism of microbes in the pits and distilled grains fermentation effectively. A multi-sensor group of temperature, humidity, acidity and oxygen content is installed in the pit, and a pressure sensor is installed at the bottom of the stepping block to obtain the pressure on the interface between the simulated feet and fermented grains and the pressure between fermented grains (the pressure between fermented grains can be calculated) [16]. The side is a flat scraper, including a scraper connected with the box sliding, the scraper is evenly arranged on the vertical layout of the scraper, the end of the scraper is conical, and in the direction away from the scraper gradually narrowed, so that the scraper is more smoothly inserted into the grains. The intelligent driving vehicle is connected with the box body through the lifting arm. The driving mechanism drives the scraper down to the lower surface of the box body. The driving mechanism drives the box body to move synchronously, and the scraper on the side of the box body bulldozes the uneven grains in the pit. The rotary body can rotate the simulation foot and the scraper plate as a whole, so that the whole stepping cellar device can not only move horizontally and longitudinally, but also rotate, which greatly enriched the control mode of stepping cellar, expanded the scope of stepping, and realized the uniform stepping of the whole pit without dead Angle. The upper end of the rotating body is connected with a quick change component, which is used to connect with the mechanical arm. The whole trampling system is coordinated by the mechanical arm and the intelligent vehicle to complete the trampling cellar operation together [17]

5.3 High precision testing of porosity in fermented grains

Indexes such as porosity, temperature, humidity, acidity and water content of fermented grains entering pits have important effects on fermentation quality. In order to improve the effect of pit stepping, indexes of fermented grains entering pits must be evaluated, and the intensity, scope and working mode of pit stepping operation should be adjusted according to the evaluation results. This project in simulated trample feet (block) trample bottom decorate a variety of sensors, including

ISSN: 2414-1895 DOI: 10.6919/ICJE.202109_7(9).0013

pressure sensor, porosity, etc., as well as the temperature, humidity, acidity, installed in the cellar pool [18] oxygen sensor, using high fidelity signal disposal (coupling, PGA amplification, filter and differential signal conversion, etc.) and multichannel parallel data acquisition circuit, The analog signal output by the sensor was converted to analog digital to obtain the original input data of the fermented grains.Based on multi-sensor fusion technology [19], the original data collected by different types of sensor systems were comprehensively analyzed and calculated to obtain evaluation parameters reflecting the current pressure (looseness) between fermented grains and the temperature, humidity, acidity and water content in the pit, which were transported to the central control system and expert analysis and control system. After the analysis and evaluation by the central control system, the feedback digital signal which can be used to adjust the stepping cellar parameters is automatically output, and the PLC and other institutions are controlled to operate the stepping equipment to perform the stepping cellar operation according to the control parameters.In addition, the evaluation data of fermented grains entering pits sent into the expert analysis control system [20], after expert analysis, can also be used for manual guidance and adjustment of operation parameters of intelligent pit stepping equipment to accurately control the pit stepping operation process, and finally realize the digitalization and standardization of the indexes of fermented grains entering pits.

According to the winery process [21], most of the cellar ponds are 3200mm×3600mm×3800mm, so the cellar ponds are divided into 4 areas, and a high-precision pressure sensor is installed in the center of each area. The pressure sensor will transmit the data collected to the CENTRAL processing unit through analog to digital conversion [22]. The CENTRAL processing unit compares the measured data with the data set for the stepping pit process and sends it to the stepping pit unit to perform its operation.

Since porosity refers to the sum of aeration pores and water-holding pores in the matrix [23], it is expressed as the percentage of pore volume in the total volume of the matrix.First, samples were taken from fermented grains for several times. The pressure on V1 volume of fermented grains was P1, and then the volume of V1 volume of fermented grains was dried and measured again, so that the porosity of the experimental data ρ1=(V2/V1) %. According to measurement, the compressive strength had an inverse linear relationship with porosity [24], and its linear constant was K.With the experimental data K=ρ1•P1, the porosity ρ=(K•1/P) % can be calculated by calculation.

5.4 Step cellar index BP neural network model

When the BP neural network method is used to predict the data index of the stepping pit, the training of sample data is input and the gradient of each parameter involved in the operation is solved according to the back propagation algorithm, namely the process of optimizing the loss function, so as to minimize the deviation between the predicted value and the actual value so as to achieve the optimal level of the stepping pit process [25]. In this model, each neuron of the input signal through the corresponding error adjust the connection weights, respectively add up these signals have a total input values, the total input values compared with simulation of threshold voltage, the final output is obtained by processing activation function, and by building the parameter prediction model based on BP neural network, The final results of the parameters in the actual measurement are predicted, and the measurement time can be shortened by predicting the results.

According to the analysis of the cellar stepping process, the cellar stepping is to repair the sealing, so as to achieve an environment with less oxygen content [26]. After being send pits fermentation of the grains into the inside, with pits are in a process in a timely manner, and ask around tight, loose on both sides, according to temperature, humidity, acidity, pressure and oxygen index, proper pressing, efforts must be controlled properly, not too much nor too loose, so as to avoid the fermentation materials saved too much air. The neural network structure established is a three-layer standard structure of input layer, hidden layer and output layer [27]. Layer 0 is the input layer (5 neurons, respectively temperature, humidity, acidity, pressure and oxygen content), and layer 1 is the hidden layer ($l = \sqrt{n+m} + a$), where, N is the number of neurons in the input layer, m is the number of neurons in the output layer, and A is the constant between [1,10]. Based on the experimental training

ISSN: 2414-1895 DOI: 10.6919/ICJE.202109_7(9).0013

results, 6 neurons are set in the hidden layer); the second layer is the output layer (1 neuron is the standard parameter of the cellar stepping process) [28]. The network uses s-type transfer function: $f(x) = \frac{1}{1+e^{-x}}$, error function : $E = \frac{\sum_i (t_i + o_i)^2}{2}$, (Ti is the expected output, oi is the calculated output of the network), and the error function E reaches the minimum value by constantly adjusting the weight.

Between the hidden layer and the output layer, the weight value and the bias term are linearly transformed, and then the output layer is obtained through the activation layer. BP neural network usually uses Sigmoid differentiable function and linear function as the activation function of the network. In this paper, the sigmoid tangent function tansig is selected as the activation function of hidden layer neurons [29].

Remember that the weight value from the input layer to the hidden layer is W, the bias term is b_1, the activation function is g_1, the weight value from the hidden layer to the output layer is V, the bias term is b_2, and the activation function is g_2 [30,31], as shown in the figure 4 shows:

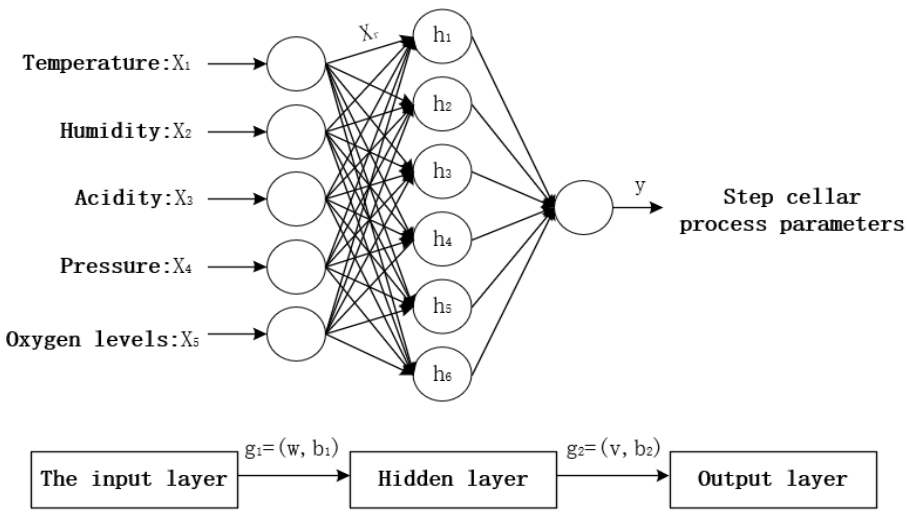

Figure 4. BP neural network model

The output model can be:

$$y = g_2(V^T g_1(W^T X + b_1) + b_2)$$

6. Conclusion

The problem of intelligent cellar stepping has always been one of the core contents of intelligent liquor brewing system research.Starting from the intelligent overall assessment on cellar device, automatic leveling, trample actuator machinery design and implementation, distilled grains, such as temperature, humidity, acidity, oxygen index test system, intelligent on kiln control system research and development, the high precision distilled grains looseness (porosity) detection in intelligent on the aspects of kiln system in-depth summary and innovation, Based on the investigation and evaluation of the operating conditions of the winery, this paper puts forward the system comprehensive design of the step cellar part which is suitable for the actual intelligent winemaking industry. (1) In the design of the positioning device of the stepping cellar device into the cellar, the crane driving scheme is adopted, which is not only flexible and convenient, make full use of the workshop space, and avoid direct contact with the cellar surface of the pit, and can well protect the cellar wall. (2) In the design of the stepping cellar working device, the stepping cellar mechanism and scraping mechanism are combined together, so that the structure of the device is compact, avoiding the time to switch tools when they are used separately, and improving the working efficiency. At the same time, it can meet the flexible demand when stepping on the cellar, so that the force is uniform when stepping on the cellar. (3) In the design of the device control scheme, the PLC servo control

system is selected to complete the hardware selection of the whole servo control system, and the programming process and the overall framework of the whole control system are proposed.It has certain reference value for the research and design of liquor intelligent brewing system.

References

[1] Gan Wei. The second edition of "Traditional Liquor Brewing Technology" is published and issued[J]. Winemaking Technology, 2017(07): 98.

[2] Wu Jianfeng, R&D and application of key technologies for solid-state fermentation of Luzhou-flavor liquor intelligent brewing. Jiangsu Province, Jiangsu Jinshiyuan Wine Industry Co., Ltd., 2017-09-22.

[3] Li Shichu, Xu Baoguo, Yu Quan. Intelligent control system of rice wine brewing process[J]. Winemaking Technology, 2016(03): 91-95.

[4] Lu Nan. Inspection and detection of liquor quality and quality control analysis of blended liquor[J]. Food Safety Guide, 2020(30): 61.

[5] Wang Zhenling, Yu Xuedou, Li Haijun. The design of a multi-parameter intelligent monitoring system for the fermentation process of fermented wine based on single-chip technology[J]. Electronic World, 2020(09): 120-121.

[6] Zhang Guoqi, Tian Yanting. Multi-parameter automatic monitoring system for mash fermentation process [J]. China Brewing, 2017, 36(05): 179-182.

[7] Cui Haihao, Meng Jiaojiao. Application of Internet of Things Technology in the Production of Shilixiang Liquor [J]. Wine Making, 2016, 43(03): 115-117.

[8] Wang Zhenling, Yu Xuedou, Li Haijun. The design of a multi-parameter intelligent monitoring system based on single-chip microcomputer technology in the fermentation process of glutinous rice [J]. Electronic World, 2020(09): 120-121.

[9] Liang Guozhuang, An Zaiqiu, Tian Hanlei, Li Rui. Design of wireless remote data transmission system based on network protocol [J]. Modern Electronic Technology, 2020, 43(06): 23-26.

[10] Meteorology; Studies from National Institute for Environmental Studies in the Area of Meteorology Described (A Cryogen-free Automated Measurement System of Stable Carbon Isotope Ratio of Atmospheric Methane) [J]. Energy & Ecology, 2020.

[11] Awoyemi Babatunde S., Maharaj Bodhaswar T.. Quality of service provisioning through resource optimisation in heterogeneous cognitive radio sensor networks [J]. Computer Communications, 2021,165.

[12] Li Xunbo, Zhong Li, Zhang Xiaolian, Liu Duotao, Tu Fuming, Cai Hanbin, Yu Wenjie. On-line parameter measurement method based on improved BP neural network [J]. Instrumentation Technology and Sensors, 2019(02): 119-121 +126.

[13] Feng Yong-qiang, Liu Yu-Zhuang, Wang Xin, He Zhi-Xia, Hung Tzu-Chen, Wang Qian, Xi Huan. Performance prediction and optimization of an organic Rankine cycle (ORC) for waste heat recovery using back propagation neural network [J]. Energy Conversion and Management, 2020,226.

[14] Yu Zhenbao, Lu Xiaoping, Liu Ying, Yu Peidong, Zhang Dongmei. An improved BP neural network based receiving signal strength ranging algorithm [J]. Science of Surveying and Mapping, 2020, 45(11): 48-52+67

[15] Kazerouni Anum S., Gadde Manasa, Gardner Andrea, Hormuth David A., Jarrett Angela M., Johnson Kaitlyn E., Lima Ernesto A.B. F., Lorenzo Guillermo, Phillips Caleb, Brock Amy, Yankeelov Thomas E.. Integrating Quantitative Assays with Biologically Based Mathematical Modeling for Predictive Oncology [J]. iScience, 2020,23(12)..

[16] Zhang Shuying. Case-driven exploration and practice of mathematics teaching reform based on mathematical modeling [J]. Xue Xue, 2020(36): 47-4

[17] Wang Pei, Xie Zhi. System design of stepping cellar device for liquor brewing[J]. Equipment Manufacturing Technology, 2014(11): 20-22.

[18] Xie Zhi, Yu Lanying, Ke Jian, He Yonggang, Deng Bin. Research on the structure of the pit device for liquor brewing[J]. Winemaking Technology, 2014(03): 73-76.

[19] Li Yutong, Qi Shipeng, Qiu Lihua, Meng Fangang. Research progress and discussion on mechanized liquor brewing [J]. Winemaking Science and Technology, 2016(10): 82-84.

[20] Wang Shoubei, Wang Huabin. Analysis on the production process of Luzhou-flavor Daqu liquor by pressing pool [J]. Wine Making, 2018, 45(03): 55-56.

[21] Liu Zihong. Analysis of the entry conditions for the brewing of Luzhou-flavor wine[J]. Liquor-making, 2001(04):50.

[22] Wu Jianjun. The influence of air on the fermentation of Luzhou-flavor liquor [D]. Jiangnan University, 2004.

[23] Liu Zihong, Li Xuesi. Production process parameters and matters needing attention in the round pond of Luzhou-flavor liquor [J]. Wine Making, 2010, 37(01): 34-36.

[24] Chen Weiqi, Wang Jingchang, Chen Ling, Yang Yongqin, Wu Yong. Multi-factor sensing terminal replacement prediction model based on deep neural network [J/OL]. Journal of Zhejiang University (Engineering Science Edition)

[25] Feng Yong-qiang, Liu Yu-Zhuang, Wang Xin, He Zhi-Xia, Hung Tzu-Chen, Wang Qian, Xi Huan. Performance prediction and optimization of an organic Rankine cycle (ORC) for waste heat recovery using back propagation neural network [J]. Energy Conversion and Management, 2020,226.

[26] Liu Guohui. Improved artificial artificial neural network prediction model [J]. Journal of Xinxiang University, 2020, 37(12): 52-54.

[27] Bai Haojie, Liu Yuanzhen, Guo Yaodong, Zhao Min. Strength prediction of recycled thermal insulation concrete based on GA-BP neural network[J]. Concrete, 2020(11): 16-19+25.

[28] Li Xin, Tang Jian. Evaluation of Credit Risk of Supply Chain Finance in Chemical Industry Based on BP Neural Network [J]. Logistics Technology, 2020, 43(11): 154-159

[29] Zhao Lan, Liu Ying, Li Junye. Prediction model of total phosphorus concentration in sewage based on self-organizing neural network [J]. Computer Simulation, 2020, 37(11): 465-469.

[30] Mao Chengying, Lin Rongru, Towey Dave, Wang Wenle, Chen Jifu, He Qiang. Trustworthiness prediction of cloud services based on selective neural network ensemble learning [J]. Expert Systems With Applications, 2021,168.

[31] Zhang Zhe, Liu Weibin, Yan Lei, Yuan Hui, Hao Junjie, Wang Huaiwen, Tian Jinjin. Prediction of thermal properties of fruits and vegetables based on BP neural network model [J]. Food Science and Technology, 2020, 45(11): 28-35.