ISSN: 2414-1895 DOI: 10.6919/ICJE.202109_7(9).0078

Simulation of Overload Automatic Alarm System based on Proteus

Lei Yin*

Department of Automation, North China Electric Power University, Baoding 071000, China.

Abstract

In order to make 8051 microcontroller as an independent processor to detect control targets in practical applications, and to automatically alarm and deal with problems. First, the transmission principle of all kinds of sensors is introduced, and the parts of sensors that are difficult to simulate are simplified in Proteus. With AT89C51 as the core of the simulation application under Proteus platform, the alarm program is programmed in C language. At the same time, the design system is validated by taking liquid level control as an example. Focus on the analysis and summary of the simulation structure of the entire simulation system and the upgrade plan of the alarm part.

Keywords

Overrun Automatic Alarm; Proteus; 8051 Microcontroller.

1. Introduction

51 single chip microcomputer is a general term for single chip microcomputer compatible with Intel 8051 instruction system. 51 single chip microcomputer is widely used in household appliances, automobile, industrial measurement and control, communication equipment. It is one of the most widely used 8-bit single-chip microcomputer. Its representative model is ATMEL's AT89 series, which is widely used in industrial measurement and control system. At present, many companies have launched 51 series compatible models, which will occupy a large market for a long time. 51 single chip microcomputer is a basic entry of a single chip microcomputer, or the most widely used one.

The transmitter is mainly composed of measurement part, amplifier and feedback part. The measurement part is used to detect the measured variable x and convert it into the input signal Zi (voltage, current, displacement, force or torque) which can be accepted by the amplifier. In the feedback part, the output signal Y of the transmitter is converted into the feedback signal ZF, and then sent back to the input. Compared with the algebraic sum of zero signal Zo and feedback signal ZF, the difference between Zi and zero signal Zo is smaller ε It is sent to the amplifier for amplification and converted into the standard output signal. [1-2]

Proteus is an EDA tool software released by Labcenter electronics company in UK. It not only has the simulation function of other EDA tools, but also can simulate MCU and peripheral devices. It is a good tool to simulate MCU and peripherals. It also supports IAR, KEIL, MATLAB and other compilers. Proteus can simulate 51 series, AVR, PIC, arm and so on. It can also program directly on the virtual prototype according to the schematic diagram, and then cooperate with the display output. After running, you can see the effect of input and output. With the help of virtual logic analyzer and oscilloscope, proteus has established a complete electronic design and development environment.

Volume 7 Issue 9, 2021
DOI: 10.6919/ICJE.202109_7(9).0078

2. Methodology

2.1 Overall structure of the system

AT89C51 is selected as the processor in this simulation. It has simple internal structure and wide application. It is easier to configure than other processors.

The overall structure of the system is shown in the figure. The transmitter sends the measured value of the controlled target to AT89C51 through a / D conversion. Then AT89C51 processes the input signal and sends the signal to the alarm circuit and electromagnetic drive circuit for alarm. Figure 1 is the system design flow chart.

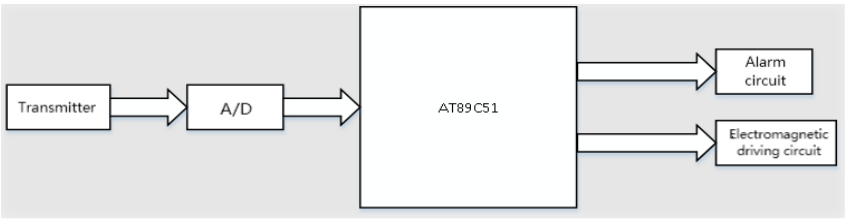

Figure 1. The system design flow chart

2.2 The overall logic diagram of the system

The overall logic diagram of the system is shown in Figure 2. If the zero point of the transmitter is set as the reference, the maximum and minimum values of the controlled quantity correspond to the 1-5V voltage signal output by the transmitter. Because the measured value is linear with the output current, Umax and UMIN corresponding to the upper and lower limits can be obtained. The input digital quantity is compared with the designed comparison quantity in advance, and different signals are output according to different results to complete the control of switching quantity channel.

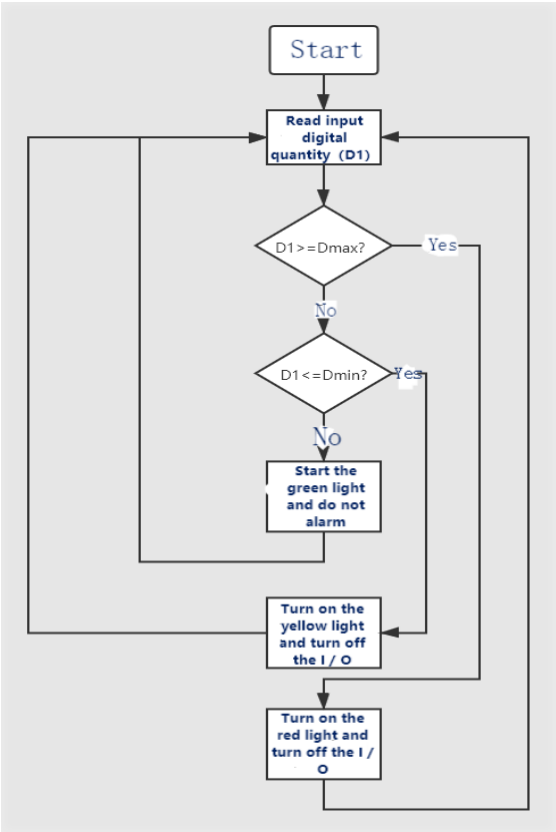

Figure 2. The overall logic diagram of the system

ISSN: 2414-1895 DOI: 10.6919/ICJE.202109_7(9).0078

2.3 Overall system simulation diagram

The signal collected from the field is transmitted to the analog input channel through the sensor transmitter. After sampling and holding, it becomes discrete signal, and then becomes digital signal through a / D converter. However, it is difficult to realize sampling and holding in the process of simulation. Therefore, starting from a / D converter, ADC0808 successive approximation A / D converter is selected for AD conversion, and 74LS374 data latch is used as data latch to ensure that the output signal will not jump. The simulation diagram is shown in Figure 3.

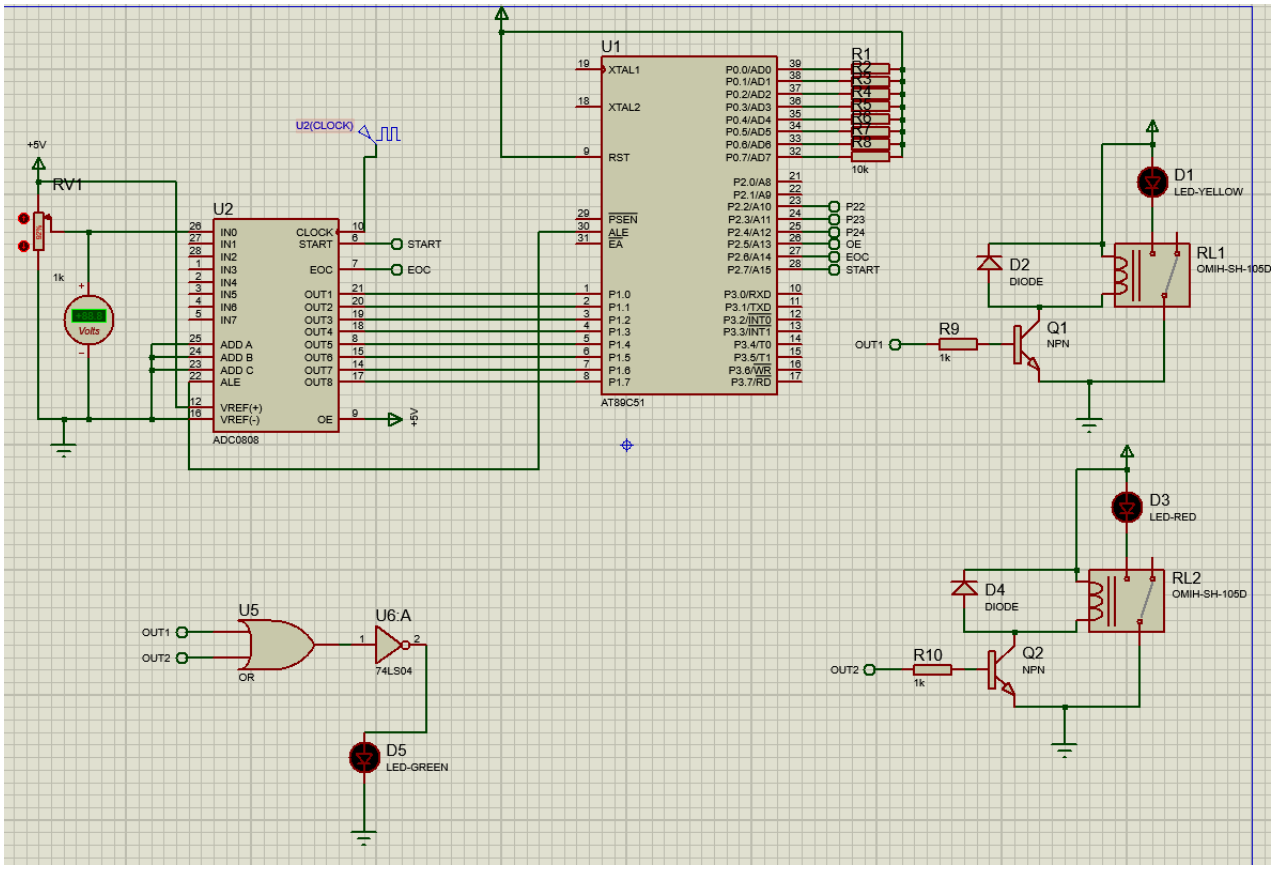

Figure 3. The simulation diagram

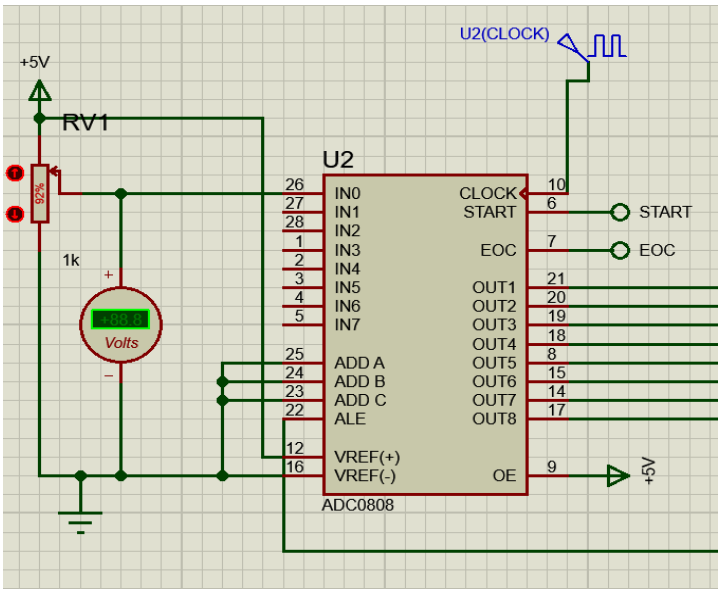

Figure 4. The actual simulation model of analog input channel

ISSN: 2414-1895 DOI: 10.6919/ICJE.202109_7(9).0078

2.4 Analog input channel

In the computer control system, in order to realize the control of the production process by the computer, it is necessary to set up a process channel between the computer and the production process to transfer and transform information. [2]

The signal collected from the field is transmitted to the analog input channel through the sensor transmitter. After sampling and holding, it turns into discrete signal, and then into digital signal through A/D converter. However, it is difficult to realize sampling and holding in the simulation process. Therefore, the simulation starts from A/D converter, and uses a constant power supply and the voltage division function of sliding rheostat to simulate the 0-5V signal generated by the input transmitter, The actual simulation model of analog input channel is shown in Figure 4.

2.5 Switch output channel

The circuit is mainly responsible for alarm and control switch. When the measured value is within the normal range, the switch does not work and the green light is always on; When the measured value is higher than the upper limit, the input and output are turned off, and the high level alarm light (red light) is on; When the measured value is lower than the offline value, open the water inlet valve, and the low water level alarm light (yellow light) is on. The switch analog circuit is shown in Figure 5.

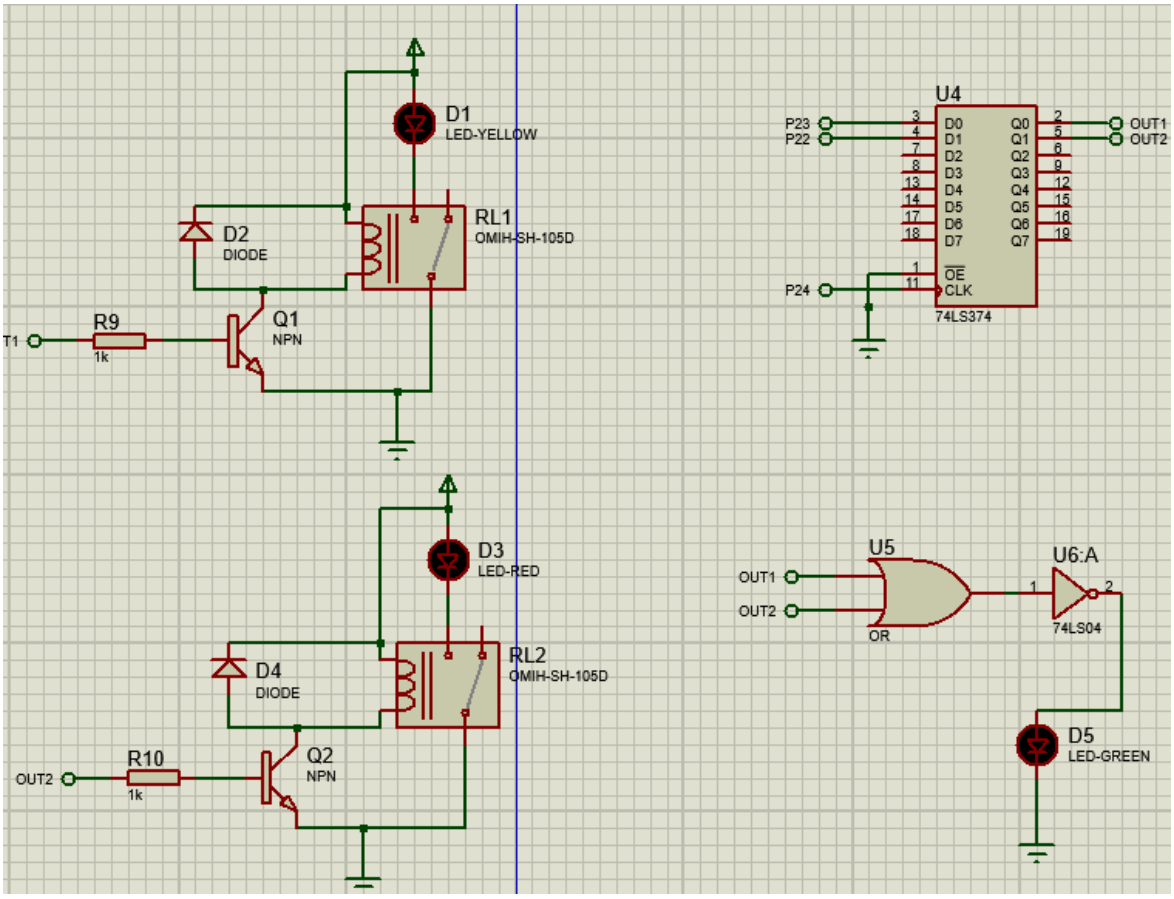

Figure 5. The actual simulation model of the switch analog circuit

2.6 Programming design

Since the system is only used to determine whether it exceeds the set upper and lower limits, after the system initialization, it only needs to compare the system voltage value corresponding to the given upper and lower limits with the received signal value, and output the control signal according to the comparison result. Keil c is used to compile the MCU program, and the generated hex file is imported into the simulation AT89C51 in Proteus

ISSN: 2414-1895 DOI: 10.6919/ICJE.202109_7(9).0078

3. Results and discussion

3.1 System operation results

Under normal conditions, the power supply and sliding rheostat are used to simulate the transmitter output. When the transmitter output, that is, the system input, is 2.6, the water level is normal at this time. The 51 MCU outputs P22 and P23 as 0, that is, both out1 and out2 are 0, and the green light is always on at this time

When the input signal is too high, that is, when the measured value of the control object is higher than the upper limit, when the transmitter output, that is, the system input, is 4.6, the simulation water level is too high, and the MCU system output out1 is 0, out2 is 1, then the red light is on

When the input signal is too low, i.e. the measured value of the control object is lower than the lower limit, when the transmitter output, i.e. the system input is 4.6, the MCU system output out 1 is 1, out 2 is 0, and the green light is on.

The state of red light of the system is shown in Figure 6

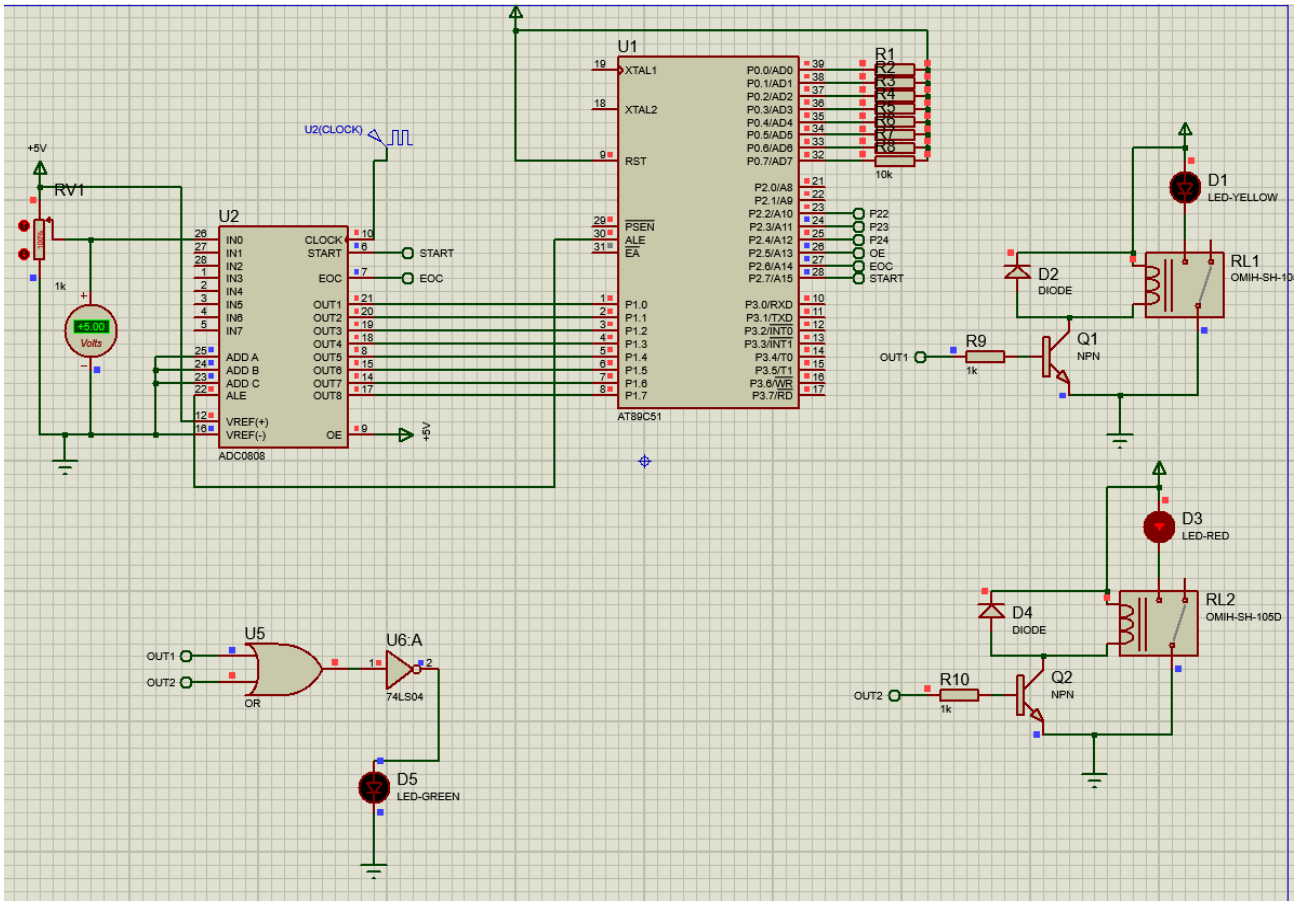

Figure 6. The state of red light of the system

From the three experimental results, it can be concluded that the simulation model works normally and can be used in various basic automatic alarm systems. At the same time, different AT89C5 output values can be customized for different system alarm targets

3.2 Further improvement of alarm circuit

With AT89C51, which can output signals of different values after judging the input signals, the present model only writes it to output two different 0-1 signals in different states, that is, out1 and out 2, with out 1 and out 2 making different combinations using logic gates in Simulink, Different switching volume signals can be derived and other elements controlled to enable a range of functions

ISSN: 2414-1895 DOI: 10.6919/ICJE.202109_7(9).0078

such as automatic switching of manual control after alarm. That is, by modifying the internal program logic and external logic circuit of AT89C51, other control effects can be easily realized

4. Conclusion

Automatic alarm technology is very necessary in real production and life. This time, using the model simulated by PROTEUS and using AT89C51 as a microprocessor to control the operation, it can easily complete simple alarm and control. At the same time, using AT89C51's multiple I/O ports, in actual use, higher-level control scheme can be achieved by modifying the internal logic of the program.

References

[1] W.J.Pan (2013) Thermal process control instrument.

[2] D. Z. Li, L.H. Zhou, S.M. Jiao (2009) Computer Control System p.14.

[3] Circuit Simulation Software with SPICE (labcenter.com)