ISSN: 2414-1895 DOI: 10.6919/ICJE.202107_7(7).0077

Research on an Intelligent Inspection Car for Pipeline Inspection

Hongshuo Zhang[1], Shiguan Yu[2], Jiaqi Zhang[1], Jiandou Gao[1], Jiahui Li[1]

[1]Merchant Marine College, Shanghai Maritime University, Shangha, China;

[2]School of Transportation, Shanghai Maritime University, Shangha, China.

Abstract

Through searching the information on the Internet, it is found that China still has great potential for development in the pipeline inspection, and it should reduce labor and protect personal safety in many aspects. By changing the diameter of the pipeline intelligent trolley, it can monitor a variety of pipelines, independently adapt to the pipeline environment, and strengthen the pipeline monitoring. This equipment is small and easy to carry, and can be tested at any time. This protects personal safety, saves to labor, meets social needs, and develops society. When using this pipeline detection sides /sided device , put it into the pipeline to be detected, and then control its driving through the PC or remote control. When using TV detection, you can see the real-time detection screen and the situation in the pipeline on the control end . When using sonar detection, you can see the dynamic data report formed by sonar detection on the control end.

Keywords

Pipeline; Remote Control; Sensor; Camera.

1. Project overview of intelligent detection car

1.1 The background and significance of the design.

The existing pipeline inspection methods mainly include television inspection (CCTV inspection), periscope inspection (QV inspection) and sonar inspection . These technologies are not popular with China due to their high prices. Therefore , the inspection and dredging up water pipes and sewage pipes have increased the difficulty, So we designed a pipeline inspection equipment.

With the rapid economic development, my country's urban and rural construction and urban construction have gradually increased , and various sewers and natural gas pipelines have naturally increased. Through this adaptive pipeline robot, various pipelines can be inspected at any time, which greatly reduces the risk of manual operation, and at the same time improves the efficiency of pipeline inspection and reduces costs[1].

The pipeline inspection robot is a practical project integrating non-destructive inspection technology, robot control technology, computer technology, data analysis and processing and other technologies. Foreign research on pipeline inspection robots began in the 1940s, due to the development and progress of microelectronics, computer technology, and automation technology in the 1970s.

Foreign pipeline inspection robot technology has been developed rapidly in the early 1990s, many experimental prototypes have been developed, a large number of research results have been obtained, and it is gradually approaching the application level. Pipeline robots can generally be divided into medium pressure differential type, wheel type, screw drive type, crawler type, snake type, peristaltic type, multi-leg crawling type, etc. according to the movement mode. Germany's REBERK and BELLERM have developed high-resolution ultrasonic online inspection devices for long-distance oil and gas pipeline wall thickness inspection and defect location. The whole device is composed of a power supply unit, a data storage unit and a detection unit. The units are connected by a universal

ISSN: 2414-1895 DOI: 10.6919/ICJE.202107_7(7).0077

joint, which can pass through an elbow with a radius of curvature of 1.5D[2]. When the device conducts online inspection, 240 straight probes are used to measure the wall thickness of the pipeline, and 360 oblique probes at a certain angle to the pipe wall are used to detect pipeline cracks and defects, and the characteristic information of the pipeline wall thickness and defects is stored online. At the same time, the device uses a taximeter to locate the characteristic position of the defect. Romania TATARO and others have developed an in-pipe walking robot with pipe diameter adaptability. The robot is equipped with three double-row walking wheels, one of which is the driving wheel and two are the driven wheels. The pre-tension of the robot is achieved through two parallel four-bar mechanisms and pre-tension springs. Japan LIMH and others have developed an in-tube inspection robot. The six sets of driving wheels of the robot are driven by independent motors. The front and rear units are connected by joints with controllable steering angles. The speed and joint angle of the driving wheels are adjusted to make the robot smooth[3].

Through elbows and "T"-shaped tubes. The New York Gas Group Company DAPHNED'ZURKO and Carnegie Mellon University HAGENSCHEMPF have developed a pipeline robot system for underground gas pipeline inspection. The Explorer robot has its own battery and uses wireless communication. The operating distance can reach 500m at a time and can pass through 90° bends. Pipes and "T"-shaped pipes, using the "fisheye" camera on the front of the robot to observe the internal state of the gas pipe (such as blockages, water accumulation, etc.). Based on the motion principle of coelenterates such as inchworms and earthworms, Xu Congqi of the National University of Defense Technology and others have developed a new type of peristaltic micro-pipe robot suitable for pipes with an inner diameter of 15-20mm. The front and rear parts of the robot are supporting units to realize autonomous locking with the pipe wall, and the middle part is a driving unit to realize the crawling of the robot, and the units are connected by miniature cross commutating joints. The robot has the characteristics of large traction, fast and long-distance movement. Li Peng and others from the Shenyang Institute of Automation, Chinese Academy of Sciences, and others have developed an in-tube detection robot that uses a screw drive and has a self-adaptive function of tube diameter. The robot has a length of 226mm, a maximum outer diameter of 205mm, a minimum outer diameter of 175mm, and a mass of 1.95 kg. The robot is driven by a single motor. When the pipe diameter changes, it can pass obstacles through the pipe diameter adaptive mechanism; when the load changes, it can pass the speed automatically. The adaptation mechanism enables the robot to adapt to changes in the environment within a certain range. At the same time, in order to prevent the robot from being unable to move forward due to failure, a matching self-rescue robot system has been developed to rescue the robot[4].

1.2 Market demand analysis

With the development of urban construction and production , more and more managers have begun to pay attention to and strengthen the management of basic facilities such as underground pipes; however, they are buried in underground drainage pipes all the year round. The plane position, buried depth, pipe diameter , and material of the pipeline are the main contents of detection and investigation. Because the drainage pipe network is buried underground, it is an underground concealed project. Due to historical reasons and method and technical limitations, the operation of the drainage pipe has been in a lagging and relatively passive situation, and it has not been paid enough attention.

1.3 The main content of the project research and the key issues to be solved

1.3.1 The main content of the project development

By changing the diameter of the pipeline intelligent trolley, it can monitor a variety of pipelines, independently adapt to the pipeline environment, and strengthen the pipeline monitoring. This equipment is small and easy to carry, and can be tested at any time. This protects personal safety, saves labor, meets social needs, and develops society. The specific contents of the project are as follows:

(1) The design of the mechanical structure of the leg;

ISSN: 2414-1895 DOI: 10.6919/ICJE.202107_7(7).0077

(2) Reasonable use of cameras;

(3) Design of power system;

(4) The design of the entire shape;

(5) Operation of information transmission.

1.3.2 Solutions to key technical problems;

(1) Refer to other existing designs to realize the single-chip combination of GPRS wireless network communication module, related sensors and STC89C52 to realize mutual communication;

(2) Use Klimt wheel reality and tilt detection to prevent it from turning over.

(3) A 360-degree omni-directional camera is used to accurately locate the fault point.

1.3.3 Research methods

First of all, consult relevant materials, learn from the successful experience of similar products, put forward your own ideas and demonstrate according to the key problems that need to be solved, draw sketches of relevant institutions, and determine relevant parameters; secondly, purchase relevant accessories and assemble according to relevant sketches. Analyze the force status of each component, check the movement and assembly between the mechanisms, optimize the structure, and finally generate engineering drawings. According to the design drawings and materials, apply for the right to grant the patent, and write the competition materials.

This design mainly uses Solid works software for modeling, and then conducts dynamic simulation to see if there is interference to meet the requirements of the mechanical mechanism. Finally, import the three-dimensional graphics into autoCAD to generate two-dimensional engineering drawings. The basic process includes:

(1) Carry out physical measurement;

(2) Carry out 3D entity modeling and design under Solidworks according to the data;

(3) Assemble the parts and observe the relationship between the parts in three dimensions;

(4) In the Solid works environment, optimize the structure according to the assembled three-dimensional entities to make the structure simple and the appearance concise;

(5) Perform physical simulation

2. Design of Intelligent Pipeline Inspection Trolley

2.1 Performance requirements

There is no need to go down manually, which ensures the personal safety of workers. It adapts to the pipeline environment independently, and monitors all directions in 360 degrees, which can accurately determine the failure point of the pipeline. It can be used for a long time, the parts are easy to replace, and it conforms to the national standard production. It can complete a variety of pipelines. Monitor and repair in time.

2.2 Working principle and scheme design

2.2.1 Working principle

When using this pipeline detection side device, put it into the pipeline to be detected, and then control its driving through the PC or remote control. When using TV detection, you can see the real-time detection screen and the situation in the pipeline on the control end. When using sonar detection, you can see the dynamic data report formed by sonar detection on the control end.

2.3 Three-dimensional solid design

2.3.1 Overview of pro/Engineer 3D solid design

SolidWorks is a subsidiary of Dassault Systemes S.A. It is responsible for R&D and sales of window products of mechanical design software. Dassault Systèmes is responsible for the systematic soft supply industry and provides support services with Internet integration capabilities for manufacturers.

ISSN: 2414-1895 DOI: 10.6919/ICJE.202107_7(7).0077

The group provides systems covering the entire product life cycle, including the best software systems in various fields such as engineering, manufacturing, and product data management. The famous CATIAV5 comes from the company. At present, Dassault's CAD product market share At the forefront of the world.

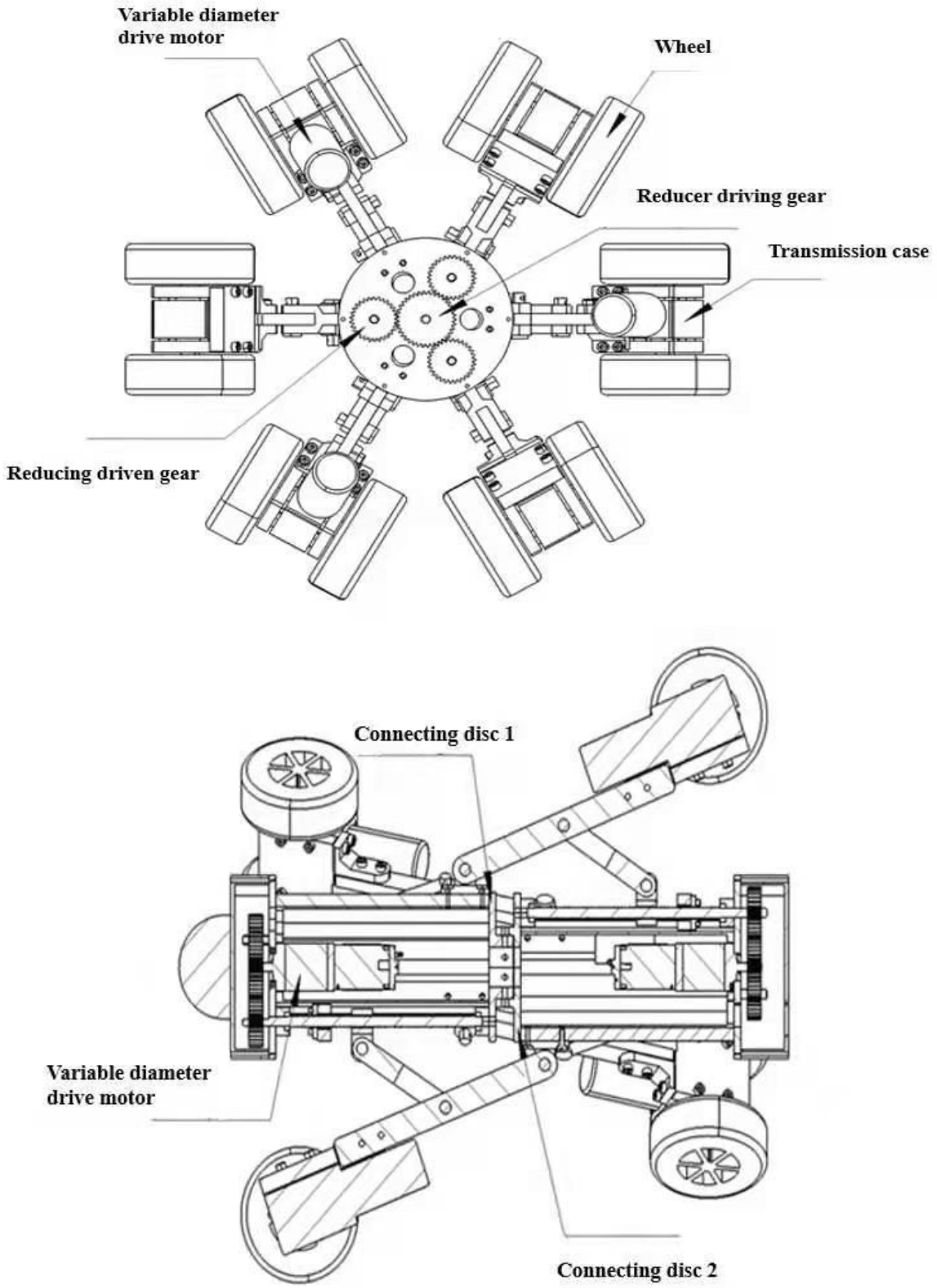

Figure 1. Structure diagram

ISSN: 2414-1895 DOI: 10.6919/ICJE.202107_7(7).0077

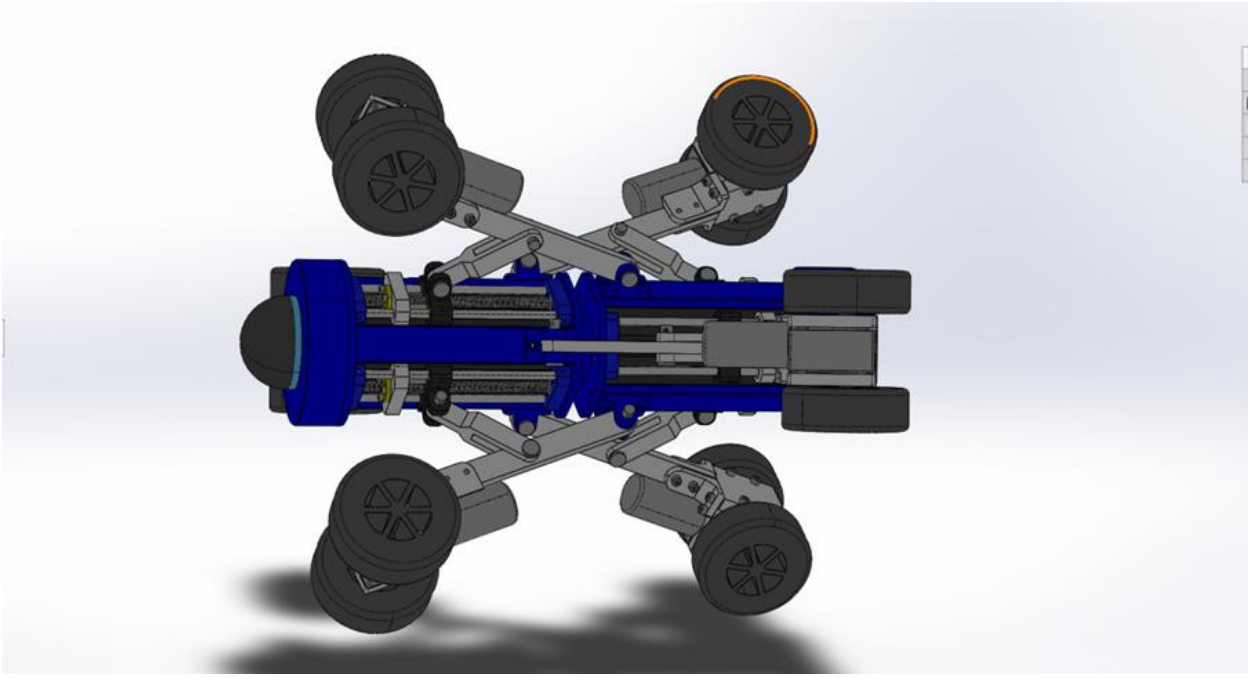

Figure 2. Appearance

SolidWorks software is the world's first Windows-based 3D CAD system. Due to technological innovations in line with the development trend and trend of CAD technology, SolidWorks has become the most profitable company in the CAD/CAM industry in two years. Good financial status and user support enable SolidWorks to have dozens or even hundreds of technological innovations every year, and the company has also won many honors. The system won the first place in the global computer platform CAD system evaluation from 1995 to 1999; since 1995, it has won 17 international awards, of which only since 1999, the authoritative American CAD professional magazine CADENCE has awarded SolidWorks for 4 consecutive years The Best Editor Award to recognize the innovation, vitality and simplicity of SolidWorks. So far, the three principles of ease of use, stability and innovation followed by SolidWorks have been fully implemented and proven. Using it, designers have greatly shortened the design time, and products have been put on the field quickly and efficiently.

2.3.2 Physical creation of parts of intelligent pipeline inspection trolley

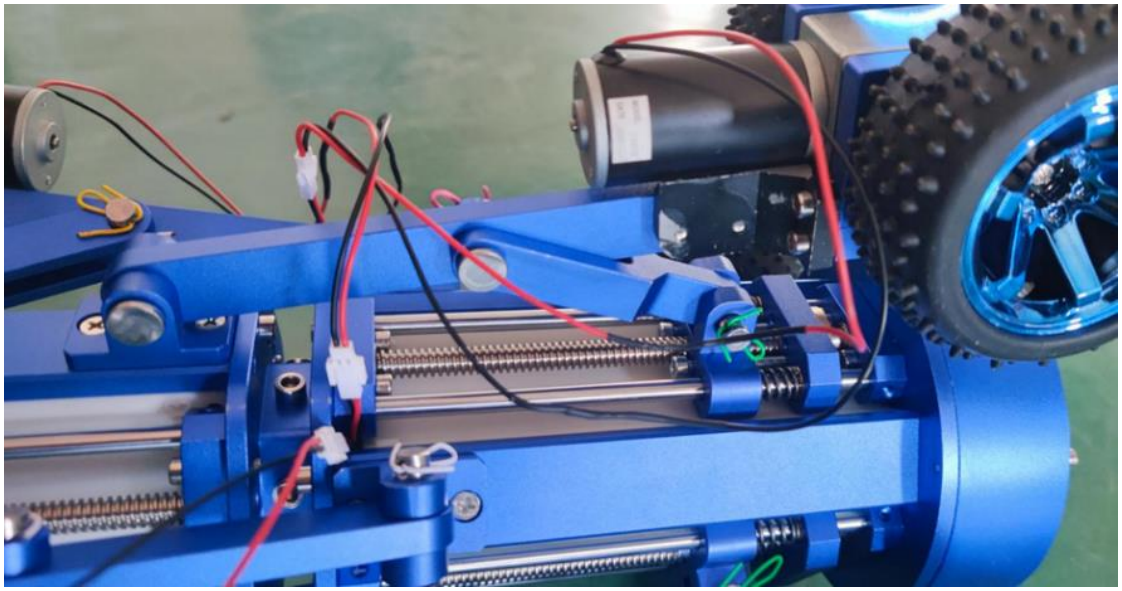

Figure 3. Leg design

ISSN: 2414-1895 DOI: 10.6919/ICJE.202107_7(7).0077

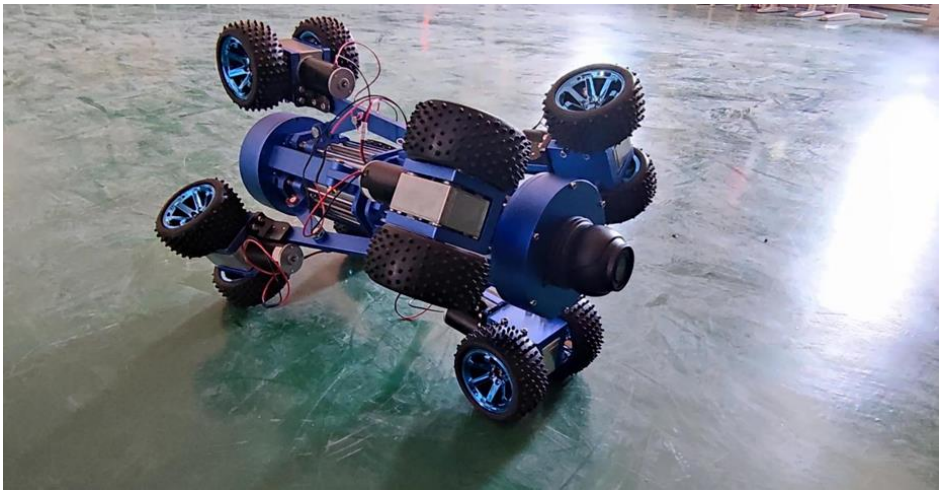

Figure 4. Overall observation

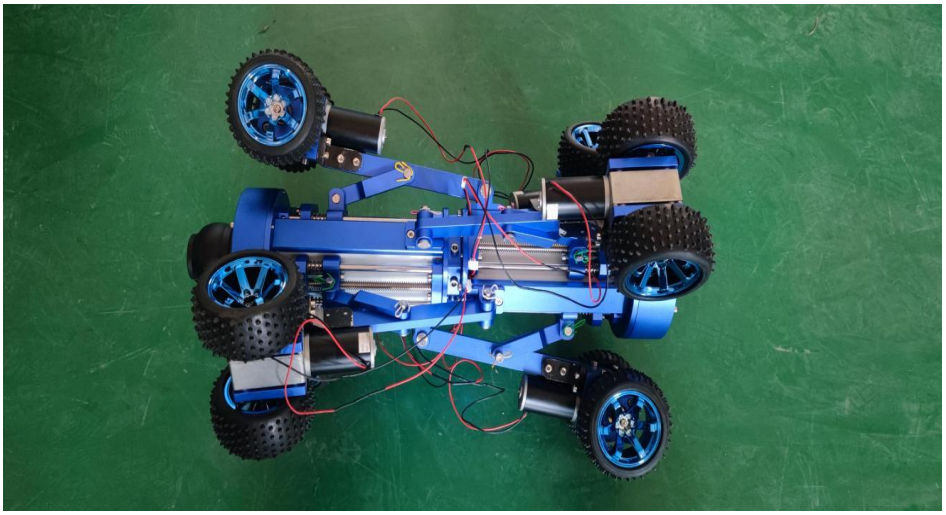

Figure 5. Appearance design

3. Advantages of intelligent detection car

3.1 The main features of the intelligent detection car

Through Internet access, it is found that my country still has great potential for development in pipeline inspection, and it should reduce labor and protect personal safety in many aspects. By changing the diameter of the pipeline intelligent trolley, it can monitor a variety of pipelines, independently adapt to the pipeline environment, and strengthen the pipeline monitoring. This equipment is small and easy to carry, and can be tested at any time. This protects personal safety, saves labor, meets social needs, and develops society.

When using this pipeline detection side device, put it into the pipeline to be detected, and then control its driving through the PC or remote control. When using TV detection, you can see the real-time detection screen and the situation in the pipeline on the control end. When using sonar detection, you can see the dynamic data report formed by sonar detection on the control end. The results of this research project are mainly reflected in:

(1) Refer to other existing designs to realize the single-chip combination of GPRS wireless network communication module, related sensors and STC89C52 to realize mutual communication.

(2) Use Klimt wheel reality and tilt detection to prevent it from turning over.

(3) A 360-degree omni-directional camera is used to accurately locate the fault point.

ISSN: 2414-1895 DOI: 10.6919/ICJE.202107_7(7).0077

3.2 Innovation

(1) There is no need to go down manually, which ensures the personal safety of workers.

(2) Independently adapt to the pipeline environment, conduct 360-degree monitoring in all directions, and be able to accurately determine the pipeline failure point.

(3) It has small size, complete functions, high efficiency, low cost and easy maintenance.

(4) It can complete the monitoring of various pipelines, and can carry out repairs

4. Social prospects

4.1 Promotion and application prospects

Due to the special importance of pipeline safety, western countries with developed pipelines began research on pipeline inspection technology as early as the 1950s. In 1965, one of the internationally renowned pipeline inspection companies, TUBOSCOPE, the United States, used magnetic flux leakage detectors for the first internal inspection of pipelines; in 1973, British Gas (BG) used magnetic flux leakage detectors for the first time under its jurisdiction. The pipe with a diameter of 600mm was successfully internally inspected[5]. Since then, new detectors using various stepping technologies have continued to appear, especially since the end of the 1980s and the beginning of the 1990s, the rapid development of computer technology has provided a strong technical guarantee for the development of high-efficiency new detection equipment, and the size of the detector has continued to shrink. The technical content is getting higher and higher, and the efficiency and reliability of the detectors have also been significantly improved[6]. They have played a major role in ensuring the safe operation of pipelines and reducing the hazards and losses caused by pipeline accidents.

Nevertheless, we are still far behind the world's advanced level. Pipeline inspection is still in its infancy. The number of pipelines inspected is less than 1/10 of the total number of pipelines, and no pipelines have been re-inspected. Due to various reasons, pipeline operators have insufficient understanding of the importance of pipeline inspection, and have not fully realized the hazards of pipeline accidents[7].

Pipeline inspection is not perfect in our country at present, and there is still a lot of room for development in this regard, and this kind of all-round inspection smart car can complete the work efficiently, with a wide range of use, small size, and easy to carry. The pipeline intelligent inspection car can monitor and accurately locate the pipeline in a variety of pipelines. There are many accidents in our country's pipelines, and our country's development is still relatively backward in this regard, so the pipeline intelligent inspection car has a very good development prospect in our country, and has a great development prospect.in time.

References

[1] Design of intelligent car control system based on STM32[J]. Wang Jiajun. Electronic production. 2018(17).

[2] Design of WIFI remote control smart car based on Android platform[J]. Zhang Ping, Chen Guozhuang, Hou Yunlei, Li Dong. Computer measurement and control. 2018(06).

[3] WIFI remote control car based on 51 single chip microcomputer [J]. Wu Benniu, Ye Wumei. Shandong Industrial Technology. 2017(07).

[4] Research and design of embedded intelligent video car based on WSN[J]. Dai Zemiao, Zhang Fei, Yan Shibo. Journal of Changsha University. 2016(02).

[5] The design of multi-function and multi-operation WiFi smart car[J]. Liao Jianwen, Peng Yongjie, Qu Xun. Journal of Ludong University (Natural Science Edition). 2015(03).

[6] Design of wireless remote control car based on STC89C52 single chip microcomputer [J]. Li Menghong, Li Handong. Automation and Instrumentation. 2015(06).

[7] Design and Implementation of Embedded Wireless Video Car [J]. Zhang Jian, Kong Cuixiang. Communication Technology. 2011(11).