International Core Journal of Engineering Volume 7 Issue 7, 2021
ISSN: 2414-1895 DOI: 10.6919/ICJE.202107_7(7).0003

Design and Test of Seeding All-in-one Machine of Potted Flowers

Guohuan Wu

Department of Mechanical Engineering, Wenzhou Polytechnic, Wenzhou 325035, China.

Abstract

W The existing potted flower transplanting process is complicated and the mechanization degree is low, in allusion to these problems, a new type of seeding all-in-one machine of potted flowers was designed. By combining the cam swing lever mechanism and the special-shaped socket seed metering wheel, the problem of precise seeding of flower seeds was solved, and provides reference for the rapid planting of potted flowers. In this paper, the innovative design and related test research of potted soil substrate opening hole mechanism, quantitative flower seed metering mechanism, and soil covering mechanism are carried out, the test results show that the seeding is accurate, the vacancy rate is low, and the opening hole depth meets the requirements. The research and development of seeding all-in-one machine of potted flowers has important practical significance to promote the development of flower potted industry.

Keywords

Flower Planting; Seeding Mechanism; PLC Control; Test.

1. Introduction

China is one of the countries with the largest flower production area in the world, and flower products have been sold all over the world. In 2017, the total production and planting area of flowers in China was about 1.3 million hectares. Zhejiang is the first group of China's flower industry; the flower industry has high economic, social and ecological benefits, with the consumption demand for flowers in the domestic market, it will grow steadily and has huge potential; the development of the flower industry plays an important role in increasing farmers' income and improving the ecology.

At present, production process of flower pot is mainly based on pot seedling transplanting, which is limited by the research level of China's agricultural institutions, the flower transplanting ways in China are obviously backward in comparison with the Netherlands, France, Japan and industrial technology developed countries, only a few large-scale demonstration enterprises imported a small amount of transplanting device to achieve standardized and automated transplanting production, the transplanting of most large-scale enterprises still rely on manually taking seedlings from plate and transplanting them to flower pots. Because most potted flowers have a short life cycle and a large demand, potted flowers have many production links and high labor intensity, especially the manual pot seedling potted link requires a lot of labor, time, and high cost, it is the "bottleneck" that restricts the increase in production scale. At present, people engaged in flower transplanting are mainly middle-aged and old, with the development of the socio-economic level, labor costs continue to increase, the total labor force in China is also in a downward trend, the structural contradiction between the rising demand for flower planting and the shortage of labor will surely promote the flower transplanting operation to develop towards automation, and carrying out innovative research on flower pot planting devices that are compatible with China's agricultural economic environment is the key to solve this contradiction.

The mechanized potting of flower pot seedlings is completed by assembly lines abroad, it adopts rod mechanism to simultaneously complete seedling picking and planting, it uses high-end technologies

ISSN: 2414-1895 DOI: 10.6919/ICJE.202107_7(7).0003

such as manipulators, hydraulic cylinders and magnetic valves, its structure is complex and the cost is high, a piece of device is close to 1 million RMB, ordinary flower farmers can't bear it. Therefore, the development of potted flower planting with simple structure, reliable work, convenient operation and high cost performance suitable for flower farmers is of great significance to liberate labor, improve the quality and efficiency of transplanting, and realize the large-scale development of the flower industry.

In this paper, a new type of potted flower seeding all-in-one machine is put forward to simplify the production process of flower pot. Change the production process of flower pot, directly mechanize flower seeds into the potting substrate quantitatively and fixed depth, simplify the transplanting process, there is no harm root problem and no slow seedling period, moreover, it can easily ensure the depth of flower planting and the number of flower in each pot.

2. The Structure and Working Principle of the Seeding All-in-one Machine

The seeding all-in-one machine of potted flower mainly contain the sprinkler mechanism 1, the soil covering device 2, the hole opening and seed metering integrated device 3, the flowerpot conveying device 4, and the control system. The planting process is roughly as follows: (1) the potting hole generating mechanism digs holes in the potting soil; (2) the seed metering mechanism sows; (3) the soil covering mechanism covers the soil to cover the seeds; (4) the sprinkler mechanism waters; (5) the flowerpot conveying device sends out the flowerpots that have been planted, meanwhile, import the unsown flowerpots for the next round of planting. The seeding all-in-one machine of potted flower should also meet the following agronomic requirements: (1) the seeding depth is not less than 25mm, so that the thickness of the soil is enough; (2) 3~4 flowers are planted in each pot, namely, the number of seeding is 3~4.

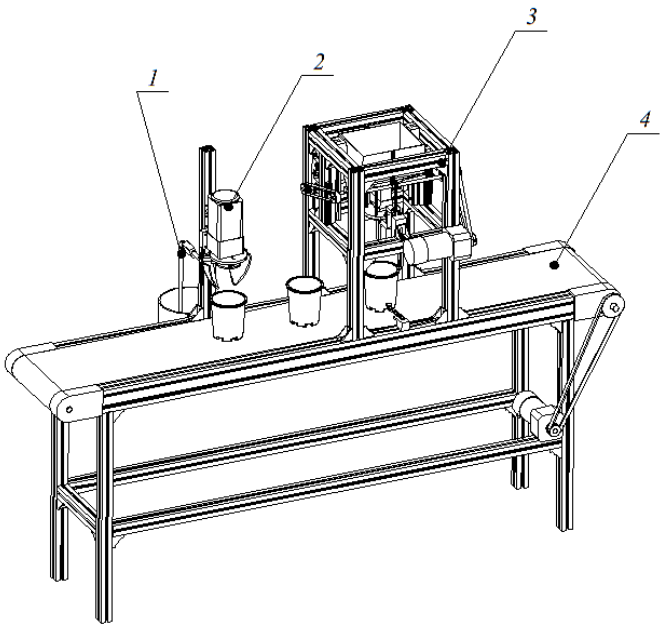

(1) Sprinkler mechanism; (2) Soil covering device; (3) Hole opening and seed metering integrated device; (4) Conveying device

Fig. 1 Structure diagram of seeding all-in-one machine of potted flower

3. Structure Design and 3D Modeling of Main Parts

3.1 Design of integrated device of opening hole and seed metering

The seed metering mechanism is a key part of seeding all-in-one machine of potted flower, before planting the seeds into the flowerpot, it is necessary to dig holes in the soil substrate in the flowerpot,

ISSN: 2414-1895 DOI: 10.6919/ICJE.202107_7(7).0003

and ensure that the flower seeds can be under the soil. Therefore, an integrated device of hole opening and seed metering is proposed, this device is mainly composed of hopper 1, seed metering machine 3, hole opener 4, and cam 5, as shown in Fig.2.

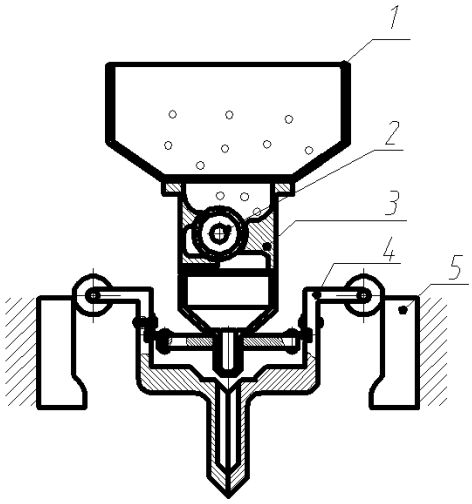

(1) Hopper; (2) Seed metering wheel; (3) Seed metering device; (4) Hole opener; (5) Cam

Fig. 2 Schematic diagram of integrated device plan of opening hole and seed metering

3.1.1 Working principle of integrated device of opening hole and seeding

The hopper, seed metering device, hole opener as one and move vertically up-and-down, when moving down, the seed metering wheel 2 in the seed metering device is driven to meter the seeds, at the same time, the lower end of the hole opener enters the soil of the flowerpot, under the action of the roller and cam 5, the lower end of the hole opener is opened to complete the digging, at this time, the seeds fall into the hole to complete the seed metering. In order to ensure that the flower seeds can evenly fall into the seed metering wheel, special-shaped socket are designed on the circumference of the seed metering wheel, and quantitative seeding is realized by designing the number of sockets on the surface of the seeding wheel and the drive transmission ratio.

3.1.2 Analysis of seed metering process

The relative movement of the socket wheel (seed metering wheel) determines whether the seeds can enter the socket hole smoothly, the seed metering device drives the socket wheel to rotate by moving up and down, makes the seeds enter the socket under the combined action of multiple directions, there is a seed groove in the socket hole. As shown in Fig.3, the condition where a single seed can enter the socket is:

$$\begin{cases} v = \omega R \\ \omega = \frac{2\pi n}{60} \\ v \leq \left(D - \frac{d}{2}\right)\sqrt{\frac{g}{d}} \end{cases} \tag{1}$$

In the formula:

v--Edge speed of seed metering wheel, m/s;

w- Angular velocity of the seed metering wheel, rad/s;

n- Rotational speed of seed metering wheel, r/min;

D--Maximum size of socket hole opening, mm;

g-- Gravitational acceleration, m/g2;

R-Radius of seed metering wheel, mm

ISSN: 2414-1895 DOI: 10.6919/ICJE.202107_7(7).0003

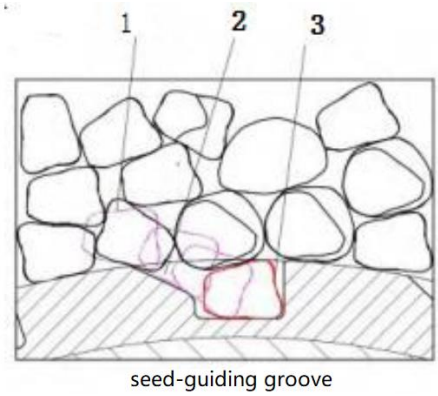

Fig. 3 Analysis of seed metering process

3.1.3 Parameter determination of socket hole

The seed-guiding groove can make the target seeds produce tendency to flow toward the hole before seed filling, and overcome the missed seeding phenomenon caused by the temporary "arch" of the first seeding layer due to the friction among the seeds being greater than its own gravity. The seed-guiding groove plays the role of seed guide, and its inclination angle θ takes 24.6°, considering that the seed is minimally damaged during filling, the seed-guiding groove extends to the deepest part of the hole, and the processed special-shaped hole is similar to the scoop shape. According to the structural diagram of Fig.4, the geometric relationship can be met.

$$\begin{cases} A_1 = \frac{C}{\tan\theta} - \frac{1}{2}B \\ B_1 = C - A_1\tan\theta \end{cases} \tag{2}$$

When the inclination angle of the seed-guiding groove is greater than 45°, the length of the seed-guiding groove A_1 is reduced, it is not conducive to seed filling, the length of the seed-guiding groove A_1 and the seed storage depth B_1 are respectively 2.8 and 1.28mm. The diameter of the seed metering wheel generally selects 30 to 60 mm, considering the overall structure of the seed metering device, the diameter of the seed metering wheel finally selects d_1=40 mm.

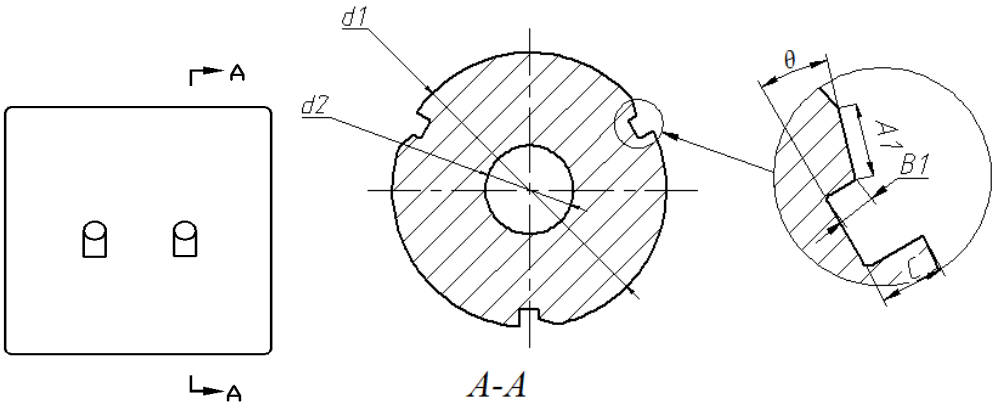

Fig. 4 Schematic diagram of the angle of the seed-guiding groove

There are many varieties of flower seeds, the shape of the different seeds varies as well, and we can replace the seed metering wheel of the automatic flower seeder to achieve the purpose of seeding different flowers. The shape and size of the socket holes depend on the shape and size of the seed. In this paper, the seeds of impatiens are taken as an example, the seeds of impatiens are similar to spheres, the seeding belongs to multi-grain dibble seeding, the socket hole design is similar to the shape of water scoop, the angle between the socket hole structure and the end surface normal of the seeding wheel is the socket hole inclination angle, which is conducive to seed filling and seeding. The three-axis size of the seed meet L> W> H, according to the principle of minimum potential energy,

ISSN: 2414-1895 DOI: 10.6919/ICJE.202107_7(7).0003

determine that the seed is the most stable state under the "flat" state, and the seed has the highest probability of filling the hole in the length direction. In order to be easy for seed filling and seeding, the socket hole is designed as the asymmetric structure with horizontal distribution and seed-guiding grooves, the length, width and depth of the socket holes should meet:

$$\begin{cases} L_{\max} < A < L + H_{\min} \\ W_{\max} < B < W + H_{\min} \\ H_{\max} < C < 2H_{\min} \\ C < B < A \\ B_1 > \dfrac{2}{3}C \end{cases} \tag{3}$$

In the formula: L_{max}——maximum value of seed length, mm

W_{max}——maximum value of seed width, mm

H_{max}——maximum value of seed thickness, mm

H_{min}——minimum value of seed thickness, mm

According to the test, the maximum sizws of seed length, width, and thickness are 3mm, 2.0mm, 1.8mm, respectively, and the minimum size of thickness is 1.6mm. Considering that the seeds of impatiens are flat, the length A, width B, and depth C of the socket holes are selected to be 3.2, 2.2, and 2.0 mm, respectively.

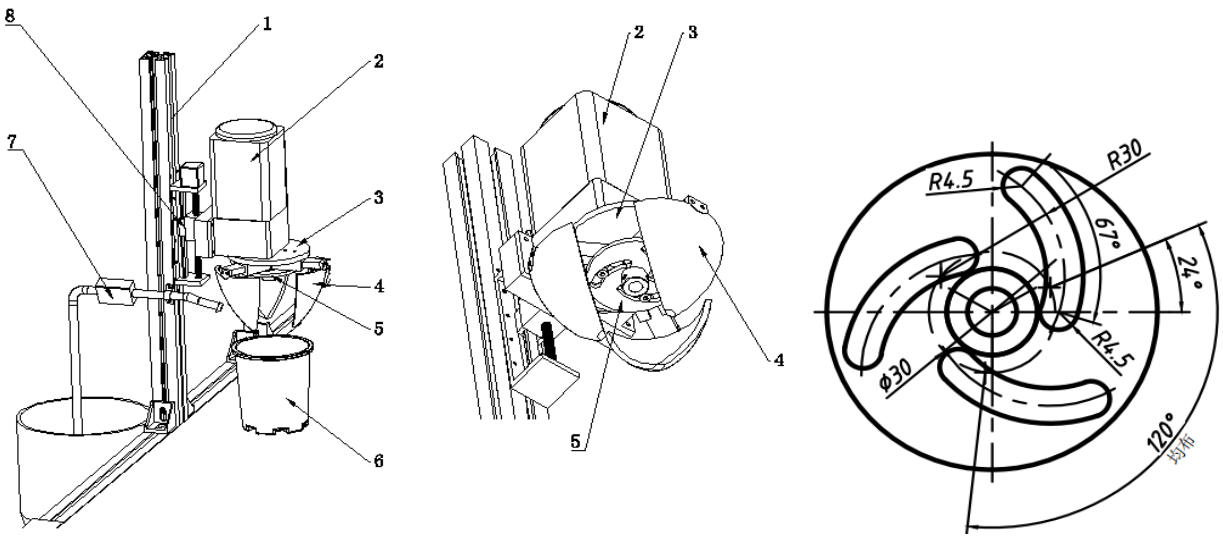

(1) frame; (2) motor; (3) soil covering support; (4) covering soil claw; (5) groove cam; (6) flowerpot; (7) watering device; (8) moving mechanism

Fig. 5 Schematic diagram of the covering soil mechanism

3.2 Design of covering soil mechanism

After completing the sowing the flower seeds, need to bury the seeds in the soil with soil and water them to make them germinate. In order to cover the soil evenly, a soil covering device synchronously driven by a triangular arc groove cam mechanism is proposed, as shown in Fig.5. This device is mainly composed of motor 2, soil covering support 3, three soil covering claws 4 and groove cam 5. The rotating shaft of the motor 2 is fixed to the groove cam 5, and the rotation of the motor drives the groove cam 5 to drive the soil covering claw 4 move along the soil covering support, the rotation of the motor makes the groove cam 5 drive the soil covering claw 4 to move along the slide rail on the soil covering support 3, and realize the opening and closing of the covering soil claws. When the

ISSN: 2414-1895 DOI: 10.6919/ICJE.202107_7(7).0003

seeded flowerpot reaches the covering soil place, the moving mechanism drives the covering soil device to move down into the flowerpot soil to a certain depth, at this time, the covering claws are closed to cover the hole evenly with the soil in the flowerpot for a week, and the moving mechanism moves up, motor 2 reverse, so that the covering soil claws are opened and reset to wait for the next soil covering, at this time, the watering device 2 spray water into the flowerpot soil quantitatively via water pump, and completes the covering soil and watering actions. The key to this device is to design the three arc grooves of the groove cam, so that the covering soil claw can smoothly complete the opening and closing actions. In order to achieve the above actions, it mainly lies in triangular arc groove cam, as long as the maximum opening of the covering soil claw is larger than the opening of the hole; make the covering is sufficient, the maximum opening of the covering soil claw here is approximately equal to 55mm, and the radius of the grooves is 30mm, and are array distributed.

3.3 3D modeling of all-in-one machine

According to the theoretically calculated size, the UG 3D modeling software is used to complete the 3D model and prototype model of each part, as shown in Fig.6, the virtual simulation is completed in the UG software to verify the correctness and feasibility of the action.

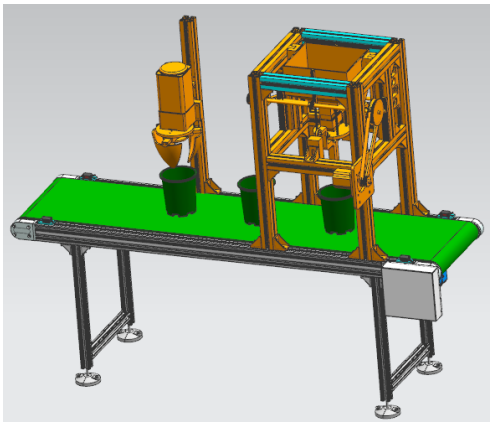

Fig. 6 Virtual simulation

Fig. 7 Impatiens seeds

Fig. 8 Physical prototype

4. Laboratory Test

In order to further test the seeding performance and working reliability of the designed seeding all-in-one machine of potted flower, the laboratory experiment is carried out on the seeding all-in-one machine, as shown in Fig.8.

ISSN: 2414-1895 DOI: 10.6919/ICJE.202107_7(7).0003

4.1 Test conditions

The test adopts impatiens seeds (as shown in Fig.7), the maximum dimensions of the length, width, and thickness of the seeds are 3mm, 2.0mm, and 1.8mm, respectively, the minimum thickness of the seeds is 1.6mm. There are 4 special-shaped sockets distributed around the seed metering wheel, the diameter of the flowerpot surface is 12.3cm, the height is 13.2cm, the test equipment is the seeding all-in-one machine of potted flower designed in this paper, as shown in Fig.8. The rotational speed of the seed metering shaft is set to be 20r/min, 25r/min, and 30r/min, and conduct the seeding test 60 times for each group.

4.2 Test results and analysis

The planting of potted flowers requires 3 to 4 plants in a flowerpot, and there are 3 to 4 seedlings in each flowerpot, so it is hoped that there are 3 to 4 seeds in the flowerpot. The test results are shown in Table.1, the seeding qualification rate is as high as 95.1%, 93.4%, 91.2%, and the probability of missing seeding and excessive seeding is not more than 5%, so the seed metering effect is good. Because the posture problem of the seeds in the hopper will cause the seeds to be unable to enter the special-shaped sockets, resulting in less seeding, however, the process accuracy of the special-shaped socket hole of the seed metering wheel and the irregular shape of the seed itself, cracks after germination treatment before sowing, poor mobility and so on, these problems can cause 2 seeds to enter a hole and lead to various problems. It can be seen from the results that the seed metering effect is still relatively ideal. The effect of opening and seeding is shown in Fig.9, the depth of opening ole fluctuates between 25~30mm, so the integrated device of opening hole and seeding is stable and reliable.

Table 1. Test results

group	rotational speed of seed metering shaft	number of seed metering	percentage(%)
		2~3	1.6
1	20r/min	4	95.1
		≧5	3.3
		2~3	3.3
2	25r/min	4	93.4
		≧5	3.3
		2~3	5
3	30r/min	4	91.2
		≧5	3.3

Fig. 9 Effect diagram of opening hole

5. Conclusion

A new type of seeding all-in-one machine of potted flowers is designed around the requirements of precise and efficient seeding of potted flowers, which integrates metering, planting, watering and

ISSN: 2414-1895 DOI: 10.6919/ICJE.202107_7(7).0003

transportation of flower seed; it greatly simplifies the transplanting process and improves the production efficiency of potted flowers.

(1) The status quo and problems of existing potted flower planting are analyzed, a new type of seeding all-in-one machine of potted flowers is put forward, the design of opening holes, seed metering integrated device and covering soil device are carried out, and the overall 3D modeling is completed.

(2) The development of the physical prototype of the new seeding all-in-one machine of potted flowers is completed, the hole opening, seed metering test and potted flower production test are conducted, the seeding pass rate is as high as 95.1%, 93.4%, 91.2%, and the probability of missing seeding and excessive seeding is not greater than 5%, the seed metering effect is good.

Acknowledgments

Supported by the General Scientific Research Program of Department of Education of Zhejiang Province (Grant No. Y202044889)

References

[1] Yuyan Liu. Analysis of Flower Market in China[D]. Beijing: China Agricultural University, 2003: 7-12.

[2] Chang K H, Chang K T, Ren S C, et al. A Simple and Nondestructive Technique for Estimating the Newly Grown Roots of Potted Phalaenopsis Plants[J]. Hortscience A Publication of the American Society for Horticultural Science, 2013, 48(3):318-321.

[3] Qingchun Feng, Xiu Wang. Design and Simulation of Automatic Transplanter for Flower Seedling[C]. 2012 International Conference on New Technology of Agricultural Machinery. 2012.

[4] Jie Xie. Design and Tests of All-in-one Automatic Transplanting Mechanism for Picking and Planting Flowers[D]. Hangzhou: Zhejiang sci-tech University, 2018.

[5] Yecheng Wang. Design and Experimental Research of Friction Type Precision Seed Metering Device [D], Shengyang: Shenyang Agricultural University, 2012.

[6] Garcia P.P. Participatory Development of a Corn Seeder[J]. Journal of Applied Crystallography, 1993, 16(1):133-135.

[7] Cailing Liu, Chao Wang, Jiannong Song, et. Design and Seed-filling Test of Cell-type Precision Seed-metering Device with Vibration Technology[J]. Transactions of the Chinese Society for Agricultural Machinery, 2018, 49 (5): 108-115.

[8] Jingling Song, Zidong Yang, Shangdong Yang, et al. A seed Metering Device of Variable Hole dept[J]. Journal of Agricultural Mechanization Research, 2010, 12(12): 103-105.

[9] Qingxi Liao. Experimental Study on Anti-Blocking and Metering Mechanism of No-Tillage Planter[D]. Beijing: China Agricultural University, 2003.

[10] Yujing Sun, Chenglin Ma, Meng Li. Analysis on Performance of an Air-blowing Vertical-rotor Type Precision Seed-metering Device[J]. Transactions of the Chinese Society for Agricultural Machinery, 40(7): 72-77.

[11] Chuzou Tang, Haifeng Luo, Mingliang Li, Ming Li. Design and Test on Seed Metering Device with Variable Capacity Model-hole Roller[J]. Transactions of the Chinese Society for Agricultural Engineering, 26(12):114-119.

[12] Yanjun Zuo, Xu Ma, Long Qi, et al. Seeding Experiments of Suction Cylinder-seeder with Socket-Slot[J]. Transactions of the Chinese Society for Agricultural Engineering, 26(11):141-144.