ISSN: 2414-1895 DOI: 10.6919/ICJE.202107_7(7).0017

Design of Dispensing System based on Machine Vision

Bitong Zhao, Qingzhong He, Jingan Lai, Kehong Li, Chao Zuo, Rundong He

School of Mechanical Engineering Sichuan University of Science & Engineering in China, Sichuan 644000, China.

Abstract

At present, the market growth rate of the dispensing packaging equipment mainly based on the dispensing machine in China increases rapidly with the decrease of the price of raw materials and the increasing demand of packaging application market. Aiming at the problems of slow dispensing, low precision and high efficiency and high precision of dispensing packaging in domestic dispensing machine, the paper puts forward the design and research of rjdnel-0001 PCB board on RJ45 crystal head socket. The position of PCB glue dispensing is accurately identified by machine vision, and then the movement of the dispensing head is controlled by servo technology to the dispensing position, which can locate the spot position of PCB more accurately and complete the dispensing operation. According to the research requirements, the overall structure design of dispensing machine is carried out, the overall scheme is designed, the workflow is determined, and the hardware design and software design of visual system in the dispensing machine are mainly solved. Through the human-computer interaction design, communication design and finally program compilation, the platform is completed.

Keywords

Automation; Dispensing Machine; PLC.

1. Introduction

With the rapid development of micro electronic devices, the traditional dispensing packaging equipment has been unable to meet the growing production demand, so it is of universal practical significance to develop a dispensing equipment with high efficiency, high precision and low cost. In view of the current situation of low dispensing efficiency, low dispensing accuracy and high dispensing cost of dispensing equipment in the background of appeal, this research mainly uses machine vision to identify the position of resistance and capacitance on the small PCB board, and uses servo system to control the movement of dispensing head to the dispensing position to realize automatic dispensing. Through the effective combination of machine vision technology and servo control technology, and applied to the design of small PCB dispensing machine, it is expected to realize the rapid identification and accurate positioning of the packaging position[1-3]. At the same time, compared with semi-automatic dispenser and programmable dispenser, this device is expected to greatly improve dispensing efficiency and dispensing accuracy. Moreover, it is designed as a miniaturized dispenser, which can significantly reduce the cost. Its design idea and basic platform can be widely applied to small and medium-sized enterprises, and promote the industrialization of small PCB dispensing automatic dispensing products Wide application lays the technical foundation and guarantee conditions[4-5].

The research on automatic dispensing machine in China has never stopped. Wang Wenhua [6]of the University of science and technology of Henan Province, combined with fc-d30 series circuit board, built the visual dispensing system, and studied the key technologies of the visual system of the

ISSN: 2414-1895 DOI: 10.6919/ICJE.202107_7(7).0017

dispensing machine. Finally, a set of machine vision dispensing platform is built which can identify the spot position of circuit board. The system has some reference significance for the construction of visual dispensing system, such as the main frame of the system, the selection of hardware equipment, and the design of recognition algorithm. But the system is still a certain distance from the real product, and there are many uncontrollable factors. Cheng Fang [7] of Shanghai University studied the positioning system of dispensing machine based on machine vision. The working principle and the realization of visual positioning system were introduced briefly. The system was built by using three axis motion platform, and the position selection of chip recognition and positioning was carried out by rectangle fitting. The system has some reference value for building a three axis operation visual dispensing platform, but the system has no servo module, so the dispensing efficiency has a considerable improvement space. Huang Ziqing [8]of Wuhan University of Engineering introduced the calibration of binocular vision camera of chip dispensing system, which has a high reference significance for the construction of the system. In addition, in the aspect of chip vision positioning algorithm, the researchers proposed an improved algorithm which can improve the positioning accuracy based on the analysis of the characteristics of traditional algorithm, which overcomes the traditional algorithm The defects of the system have a certain improvement on the overall performance of the dispensing system.

2. Overall structure and working principle of dispensing machine

2.1 Structure design of dispensing machine

Aiming at the problems of low dispensing efficiency and low dispensing accuracy, a dispensing verification platform with high-precision positioning and high-efficiency transportation production line was designed[9]. In order to optimize the unreasonable structure, CAD software is used to draw the two-dimensional drawings of the whole dispensing platform structure, establish the three-dimensional model and motion simulation research, verify the rationality of the structure, and finally complete the construction of the verification platform. This research focuses on the coordination, stability and reliability among various institutions, and effective cost control. It can be divided into the following parts: frame, three-axis manipulator part, CCD camera part, dispensing part, PCB part, conveyor belt part. The overall structure of dispensing machine is shown in Figure 1.

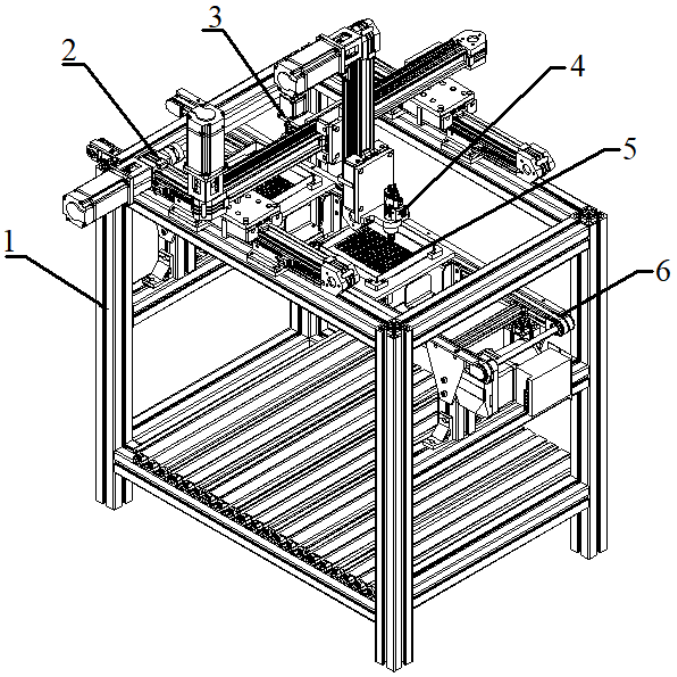

1. Frame 2. CCD camera 3. Three axis manipulator 4. Dispensing 5. PCB 6. Conveyor belt

Figure 1. Overall structure of dispensing machine

ISSN: 2414-1895 DOI: 10.6919/ICJE.202107_7(7).0017

2.2 Working principle of dispensing machine

The dispensing machine has two control modes: manual control and automatic control. PLC control is the overall control core. The pneumatic control system drives the cylinder and three-axis manipulator in each part of the experimental platform to carry out corresponding actions through the signals from various sensors and the instructions given by the upper computer, so as to achieve accurate dispensing.

The functions of the whole dispensing machine are as follows: after the initialization of the system is completed, the lighting source is turned on under the control of the light source controller, the optical signal of the dispensing circuit board is accurately projected on the CCD chip after being refracted by the optical lens, and the CCD camera converts the optical signal of PCB dispensing into electrical signal, which is sent to the computer memory through the specified format After the completion of the image signal, through a series of digital image processing algorithms, the image coordinates of the dispensing position are identified. After the image coordinates are transformed into machine coordinates, they are sent to the motion controller in a specific format. The controller calculates according to the relationship between the current position of the dispensing head and the position to be moved, and uses the parameter self-tuning fuzzy PID control algorithm to control the motion mechanism, Through the ball screw and other precision transmission mechanism, the rubber head moves to the dispensing position, and finally completes the dispensing action[10-11].

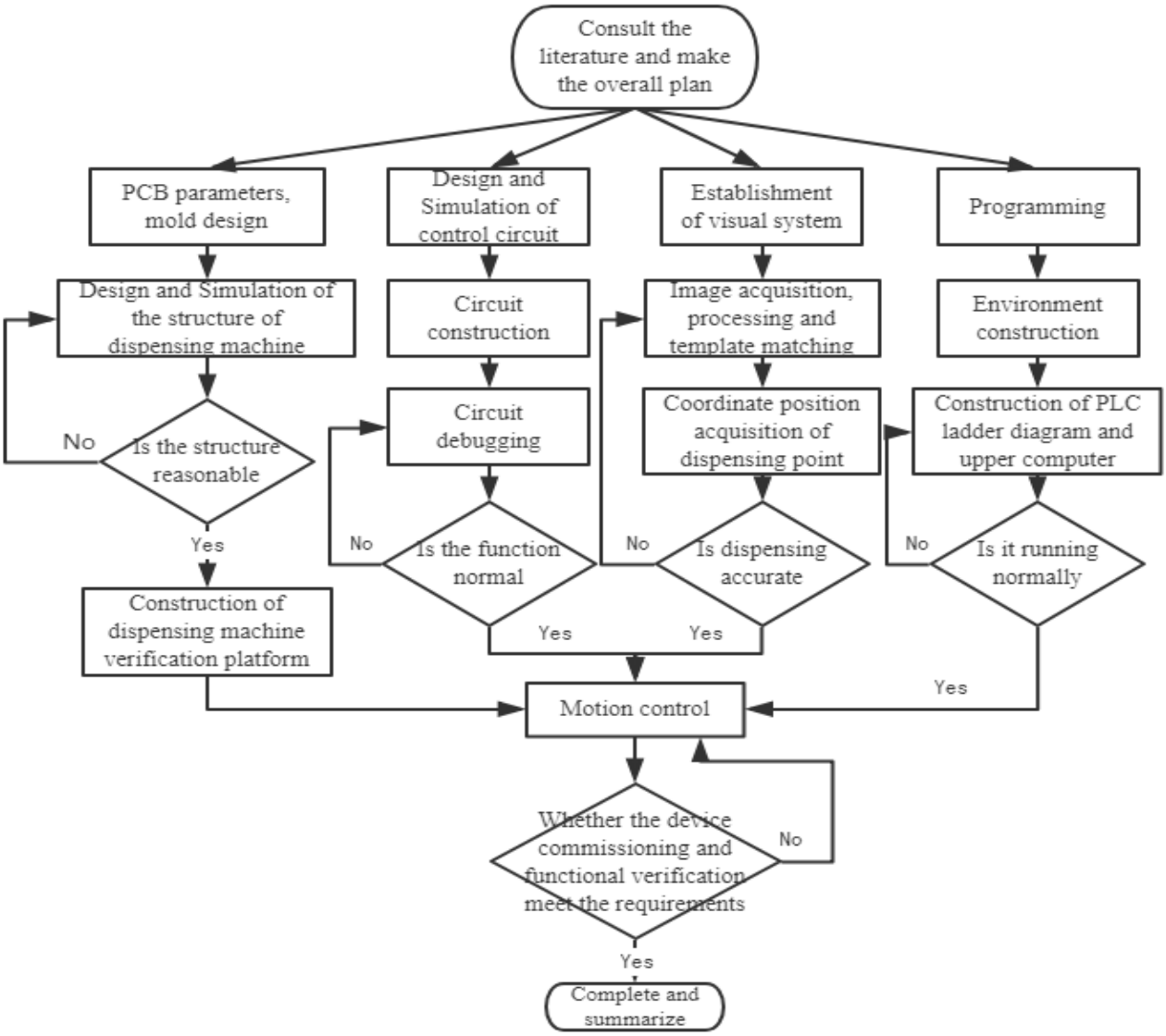

Figure 2. Overall scheme design

ISSN: 2414-1895 DOI: 10.6919/ICJE.202107_7(7).0017

3. Overall scheme design

The overall design of the visual servo system of the dispensing machine is designed. By comparing the characteristics of manual dispensing methods, the automatic dispensing system based on visual dispensing is selected. Find out the data, summarize the overall design ideas and methods of key technologies of visual servo system of dispensing platform, namely, recognize and locate the spot glue position of PCB board by building visual verification platform, control circuit design simulation, image processing and recognition algorithm, programming and so on. Mitsubishi PLC is used as the main control system, which has the functions of driving, logic control, speed regulation and protection and isolation circuit. The cylinder of conveying part, positioning part and dispensing part is precisely controlled. Three axis manipulator is driven by three servo motors. The research scheme adopts servo motion control system, and the error signal is obtained by subtracting the precise position information value and the set value obtained by sampling, and then the precision of the error signal obtained in the previous step is transformed into fuzzy quantity by using fuzzy algorithm; finally, the fuzzy decision is made according to the synthetic rules of reasoning to obtain the fuzzy control quantity[12]. The flow chart of the overall research scheme is shown in Figure 2.

4. Visual system design

Vision system is the core of the overall design scheme, which is responsible for collecting real-time images of parts. The acquired image requires that the parts feature is clear and unobstructed, and the visual system is required to be stable and adapt to repeated work for a long time. This design is intended to combine the theoretical analysis of the visual system to screen the light source, camera, lens, etc.and build a machine vision hardware platform. The images collected by CCD camera are divided into different groups. The optimal parameters obtained after a series of processing such as image processing are studied. The camera coordinates of the glue dispensing positions collected by CCD camera are calibrated by hand eye, and the optimal rotation matrix of the coordinates of the glue dispensing head and camera coordinates is studied, and then the coordinate of the manipulator control system is obtained. The main content of this research is the hardware selection of machine vision system and a series of processing of the collected images[13].

4.1 Visual dispensing hardware system, as shown in Figure 3.

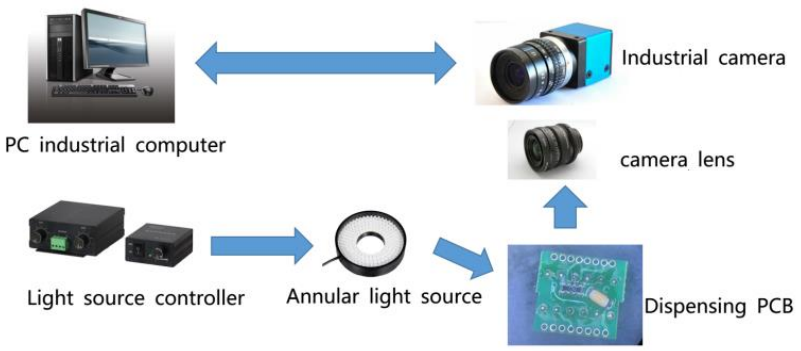

Figure 3. Hardware system of visual dispensing

4.2 Design of upper computer system

The upper software and PLC control program connect all parts of the system to achieve overall coordination. Generally speaking, the visual part of the upper computer software system is the main work. Among them, the correct recognition rate of image processing program is high, and the processing speed is fast; the serial communication program can accurately send and receive the data between the host computer and PLC; the PLC control program is simple and stable, avoiding the interference between the programs[14].

ISSN: 2414-1895 DOI: 10.6919/ICJE.202107_7(7).0017

The human-computer interaction of upper computer software system is based on the front-end development tool of. Net architecture of visual studio 2015 platform, using C # language. Visual Studio.NET[15].It provides basic functions including design, coding, compilation and debugging, database connection operation, and server component development platform based on open architecture, and involves technologies and program development languages, including HTML, ASP, VBScript, JavaScript, C + +, C #.

In this design, Halcon is used as the graphics processing software for the secondary processing of the collected pictures. Through the method of visual studio 2013 and Halcon joint compilation, image processing and human-computer interaction are unified, and finally intelligent and automatic control is realized[16].

The dispensing machine uses PLC as the control center. This design uses gx-works2 software to compile the PLC program. By using the compiling method of sequential ladder diagram, when receiving the user control signal from the upper computer, it sends information to the actuator to connect the user and dispensing. The human-computer interaction interface is shown in Figure 4.

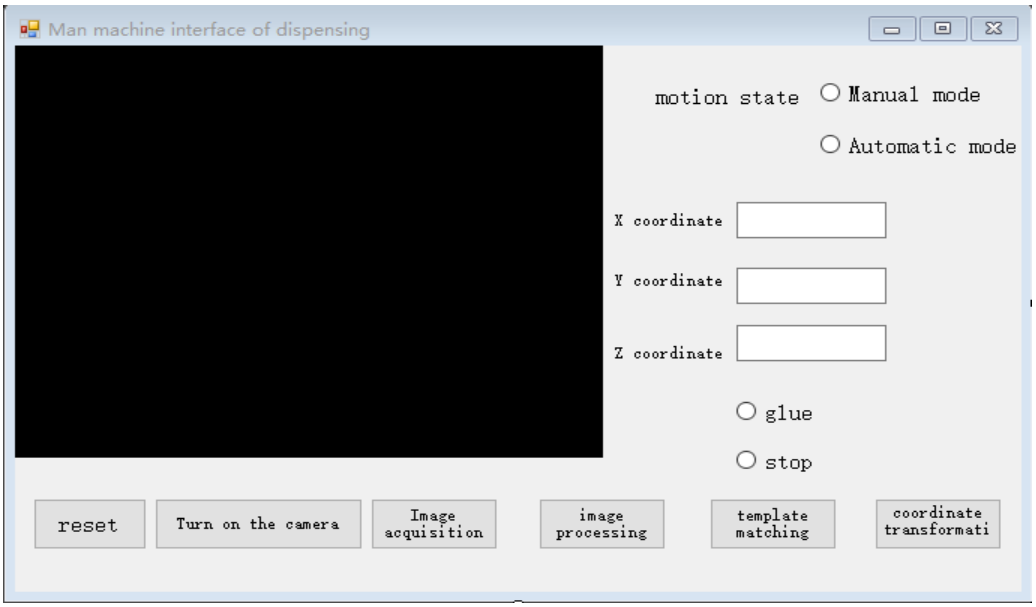

Figure 4. Interface of glue dispensing human-computer interaction

4.3 Template matching based on shape

According to the design requirements of the vision part, after the camera nine eye calibration and distortion correction are completed, the PCB dispensing points are processed, the shape is extracted, the ROI is created, and the template is created according to the prepared template image. Through parameter selection, the image collected by CCD camera is matched with the template by application parameters, and the shape matching is carried out according to the set position, angle, scaling ratio and score.

The calculation process of matching score: the total number of edge points of template image is n. on the corresponding matching ROI area, the cosine value (between 0-1) of the included angle of the direction vector of each point of the template boundary point corresponding to the point of the image to be matched is calculated, assuming that the matching cosine values of n points are a1, a2, a3 ~ an respectively. Then the matching value of the template in this ROI area can be expressed as:

$$P=\frac{a1+a2+a3+\ldots+an}{N} \tag{1}$$

The P value should fall between 0-1, and the closer it is to 1, the higher the match[17]. If P exceeds the matching value set by the algorithm, the ROI area is recorded, and the center point of the template is

ISSN: 2414-1895 DOI: 10.6919/ICJE.202107_7(7).0017

the position of the target object to be matched. The template matching takes the chip as an example, and the template and algorithm have the following steps:

(1) Determine the ROI area of the pump image. Through many experiments, the middle circle of the pump body is used as ROI region. (2) Establish the pump body template. Select Rio area where template needs to be created, select middle circle area to create template according to part characteristics, and structure element is circular. The contour information is extracted from the image and the matching template of the part is established. (3) Template matching. The shape matching template is established by the template image of the part, and the real-time image of the part can be collected for template matching, and the pose correction parameters can be obtained. (4) Affine transformation, match the output of the result. After the matching of part image and search is completed, the matching results of template are displayed, which is convenient for viewing and monitoring. The matching results include whether the match is successful and the matching position parameters[18]. When successful, the matching image of template and object is displayed, in which the matching image results of the display template and object are displayed by translation and rotation affine transformation. The shape based template matching image processing results are shown in Fig. 5. The shape based multi template matching affine change program is shown in Figure 6.

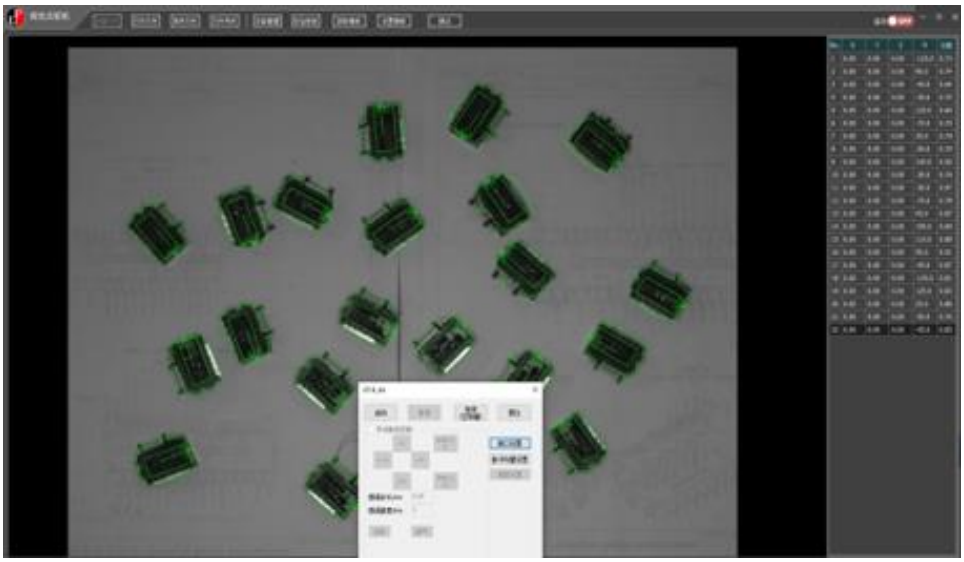

Figure 5. Template matching image processing based on shape

```
* Create model for shape-based-matching
disp_message (WindowHandle, 'Model generation...', 'window', 5, 10, 'green', 'false')
create_aniso_shape_model (ModelImage, 'auto', -0.39, 0.79, 'auto', 0.9, 1.1, 'auto', 0.9, 1.1, 'auto', 'auto', 'use_polarity', 'auto', 'auto', ModelID1)
get_shape_model_contours (ModelContours1, ModelID1, 1)
* Transform model contours from the original position for visualization
hom_mat2d_identity (HomMat2DIdentity)
hom_mat2d_translate (HomMat2DIdentity, RowModel, ColumnModel, HomMat2DTranslate)
affine_trans_contour_xld (ModelContours1, ContoursAffinTrans, HomMat2DTranslate)
* Create variation model for print inspection
create_variation_model (Width, Height, 'byte', 'direct', VariationID)
* Generate variation image
sobel_amp (ModelImage, VarImage, 'sum_abs', 5)
prepare_direct_variation_model (ModelImage, VarImage, VariationID, [20,25], [1.6,1.6])
* Get gray value range of the variation model
get_grayval (VarImage, RowModel, ColumnModel, Grayval)
*
* Display model for shape-based matching
dev_display (ModelImage)
dev_set_color ('green')
dev_display (VarImage)
disp_continue_message (WindowHandle, 'black', 'true')
stop ()
```

Figure 6. Shape based multi template matching program

5. Conclusion

(1) According to the design requirements, to achieve integrated innovation, using machine vision technology, image processing technology, drive control integration technology, computing

ISSN: 2414-1895 DOI: 10.6919/ICJE.202107_7(7).0017

technology and communication technology, on the basis of traditional dispensing to achieve further improvement of dispensing accuracy and dispensing efficiency.

(2) The whole device has the characteristics of miniaturization and mobility, high degree of automation and high dispensing precision, which can be widely used in small and medium-sized enterprises. It lays the technical foundation and guarantee conditions for the promotion and application of industrial products of small PCB dispensing.

(3) The precision of dispensing machine for dispensing package is ± 0.5mm, and the dispensing workload is 40000-60000 pieces /day. The dispensing machine can work stably and reliably continuously to meet the actual production needs of the factory.

References

[1] Zhu Jing, Zhao Jiafei, Shi Honglin, Han Xiaolin. Review of the status quo of China's IC industry in 2020 and development prospect in the new period [J]. China IC, 2020,29 (11): 11-16 + 19.

[2] Shen Xiaoping. Review and Prospect of the development of China's IC industry under the impact of the epidemic [J]. Modern commerce and trade industry, 2020,41 (13): 3-4.

[3] Wang Yinwen. Research on Fuzzy PID intelligent vehicle control algorithm based on Simulink simulation [J]. Information technology and informatization, 2020 (11): 229-232.

[4] Chen Chuan, Tang Lan. Fuzzy PID control system of belt conveyor based on PLC [J]. Coal mining machinery, 2020,41 (11): 174-177.

[5] Ma Hailong, Li Qinghua, Wei Tao, Wang Zhe. Research status of the combination of machine vision and dispensing technology [J]. Journal of Qilu University of technology, 2020,34 (01): 53-57.

[6] Song Wei, Li Wujun. Fuzzy PID control system design and MATLAB simulation [J]. Yunnan chemical industry, 2019,46 (09): 156-157.

[7] Zou Lianying, Gao Ning, Yu Baocheng. Human machine interface design of embedded dispensing control system [J]. Automation and instrumentation, 2019,34 (09): 14-17,22.

[8] Xiong Kailong. Automatic positioning system of dispensing machine based on machine learning and machine vision [D]. Nanchang University, 2019.

[9] Wei Tianlun. Research on image recognition and motion control of dispensing robot [D]. Donghua University, 2019.

[10] Jia Yuanhong. Design of embedded controller for high speed dispenser [D]. Harbin Institute of technology, 2018.

[11] Zhang Qingqing. Development of precision dispensing control and equipment for Micro Devices [D]. Dalian University of technology, 2017.

[12] Zhu Guangtao. Design of double head dispensing machine based on machine vision [D]. Jiangsu University, 2016.

[13] Huang Ziqing. Research on Key Technologies of visual inspection for chip dispensing system [D]. Wuhan University of technology, 2015.

[14] Yuan Dong. Application of computer vision technology in LED dispenser [D]. Hefei University of technology, 2015.

[15] Wang Wenhua. Research on Key Technologies of dispensing machine visual servo system [D]. Henan University of technology, 2014.

[16] Cheng Fang, Zhang Xi, Zhang Jinshong. Positioning system of dispenser based on machine vision [J]. Mechanical design and manufacturing, 2013 (03): 101-104.

[17] Chih-Wei Liao, Jiun-Hung Yu, Yeong-Shin Tarng. On -line full scan inspection of particle size and shape using digital image processing [J]. Particuology, 2010,8(03):286-292.

[18] BA shaonan, Yuan Ruibo, Liu Sen, Zhang Peng, he min, Zhang Zongcheng. Research on Fuzzy PID control pneumatic servo system based on AMESim and MATLAB / Simulink co simulation [J]. Science technology and engineering, 2010,10 (09): 2220-2223 International Journal of Advanced Robotic Systems, 2009, 6(1).