ISSN: 2414-1895 DOI: 10.6919/ICJE.202106_7(6).0010

Key Technologies in the Construction of Oil and Gas Storage and Transportation Pipelines in the New Era

Jun Liu

Southwest Petroleum University, Chengdu 610094, China.

405912692@qq.com

Abstract

The automatic control level of long-distance oil and gas pipelines is directly related to the safety and efficiency of their production and operation. Aiming at the current trend of the long-distance oil and gas pipeline control system structure gradually shifting to the centralized control of the pipeline network in the new era, the paper takes the technical characteristics of the automated control system as the main line, relies on the representative oil and gas pipeline control system, and combines intelligent pipeline construction. , Looking forward to the development prospects of long-distance oil and gas pipeline automation control technology. Through the introduction of OPC technology, the paper makes full use of the redundant resources of the existing redundant optical transmission network to build a data transmission platform for the enterprise-level oil and gas pipeline network control system.

Keywords

Oil and Gas Storage and Transportation; Pipeline Construction; Key Technology; Automatic Control; Oil and Gas Pipeline Network.

1. Introduction

With the development of computer, network communication, automation, visualization, multimedia and other technologies and the continuous expansion of domestic and foreign technical cooperation, the management and control level of domestic oil and gas pipelines has been significantly improved, especially the proposal of the digital pipeline concept, marking the oil and gas pipeline Revolutionary changes in operation management. Oil and gas regulation and operation is an important part of pipeline operation and management [1]. Through cooperation with related foreign technology companies, most of the pipelines under the jurisdiction of PetroChina have achieved the goal of centralized regulation and operation, but the current technological development direction is mainly focused on the progress of automation and communication technology. The level of oil and gas regulation has not yet truly achieved the ultimate goal of digital pipeline construction. The current domestic oil and gas pipeline SCADA system is regulated and operated. According to the data collection, the system judges the pipeline operation status through the corresponding knowledge of the oil and gas storage and transportation engineering, so as to realize the daily management and control operation of the pipeline.

2. Development of automatic control technology for long-distance oil and gas pipelines

2.1 Changes in SCADA system configuration and network structure

The SCADA system configuration and network structure development have the following characteristics: 1) The basic structure of the SCADA system has not changed. It is composed of a

ISSN: 2414-1895 DOI: 10.6919/ICJE.202106_7(6).0010

station control system with PLC as the main controller, a central network and a communication system. It is in terms of system software and hardware upgrades and data transmission methods. The big changes reflect the continuous progress of control concepts and technology. 2) The station control communication method used to connect PLC and HMI system and other equipment ranges from RS-232C and Modbusplus to the currently widely used Ethernet. The data transmission rate ranges from 1Mbps to 1000Mbps, and the data transmission speed is not the same. 3) The communication method of remote data transmission between the station control system and the control center system has changed greatly. In the early days, microwave, satellite communication, local public network (DDN, SDH), etc. were used. At present, companion optical cable, satellite or With the public network as the backup communication method, the communication speed and stability have been steadily improved. 4) Third-party communication mainly includes serial port server and direct acquisition by PLC. Both methods have their own advantages and disadvantages, and both are currently used [2]. The basic communication methods have not changed much, and most of them use serial communication, modbus protocol, Ethernet, etc. 5) Compared with the past, the remote data server and network security audit equipment have been added to the station control system network, which realizes the remote diagnosis of the control system equipment and enhances the safety of the station control system. 6) In the early SCADA system, the safety instrumented system (SIS) was integrated into the station control system. Later, it experienced several openings and closings. With the continuous popularization of process safety concepts, it has become a common practice to set up the safety instrumented system (SIS) according to the SIL rating. . However, there are still opinions that the necessity of independent installation of safety instrumented systems in gas transmission stations is open to discussion. In addition, the management and maintenance of the safety instrumented system needs to be improved.

2.2 Industrial Control Network Information Security

The openness of industrial control systems and the transmission of data in a larger range are the inevitable trends of future industrial development, and the information security of industrial control networks is of paramount importance. After the “Stuxnet virus” incident in Iran’s nuclear power plant in 2010, the cybersecurity of industrial control systems has attracted attention from all countries. From the country to the enterprise, vigorously develop industrial control system network security technology, and establish corresponding network security regulations and laws have become a top priority. Industrial control network information security has gone through the following stages: 1) Terminal protection: The early industrial control network was a physically independent network and relatively safe. At this time, terminal protection is the main security measure adopted by the industrial control network, including updating the network terminal computer system Patching and installing anti-virus software, but it is difficult to update the system patch and real-time virus database in time. 2) Border protection: With the deep integration of industrialization and informatization, border protection has become the main security strategy, including protective measures such as setting up industrial firewalls, industrial gatekeepers, and one-way isolation equipment at the entrance of the industrial control network border. 3) Comprehensive protection: At present, the industrial control system network security technology mostly adopts diversified deployments such as whitelist mechanism, audit system, border protection, etc., which can provide multi-level and multi-faceted protection for the industrial control system network. Multiple protection mechanisms work at the same time, which helps to improve the level of network security.

3. Design of automation system for oil and gas storage and transportation construction

3.1 Technical analysis

The system from data collection to transmission is mainly completed through OPC protocol. The protocol defines a general industrial communication interface. This definition enables the use of COM technology in automation fields such as process control, and has the advantages of code reusability,

ISSN: 2414-1895 DOI: 10.6919/ICJE.202106_7(6).0010

easy integration, and language independence. OPC provides many interfaces through which the client can obtain the information of the hardware devices connected to the OPCServer without knowing the details of these hardware devices [3]. In other words, the programmer can use the same program code to operate different hardware devices. Its communication method is shown as in Figure 1.

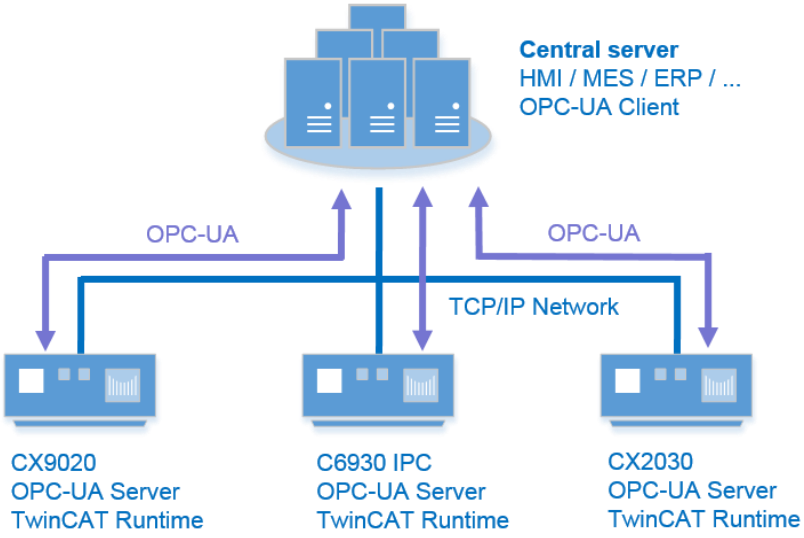

Figure 1. OPCSERVER-OPCCLIENT communication diagram

OPC technology can be used in many applications, and the OPCServer built on SCADA can obtain raw data from the bottom of the physical device, as well as directly obtain data from the PLC system. The intermediate database system is mainly composed of several important modules: data source, interface collection, intermediate database, data release and display. The two data sources on site correspond to two FailOver interface collection servers. After the data is cached, filtered, and compressed, it enters the data warehouse. The intermediate database adopts the dual-computer redundancy mode. The overall structure of the database is shown in Figure 2.

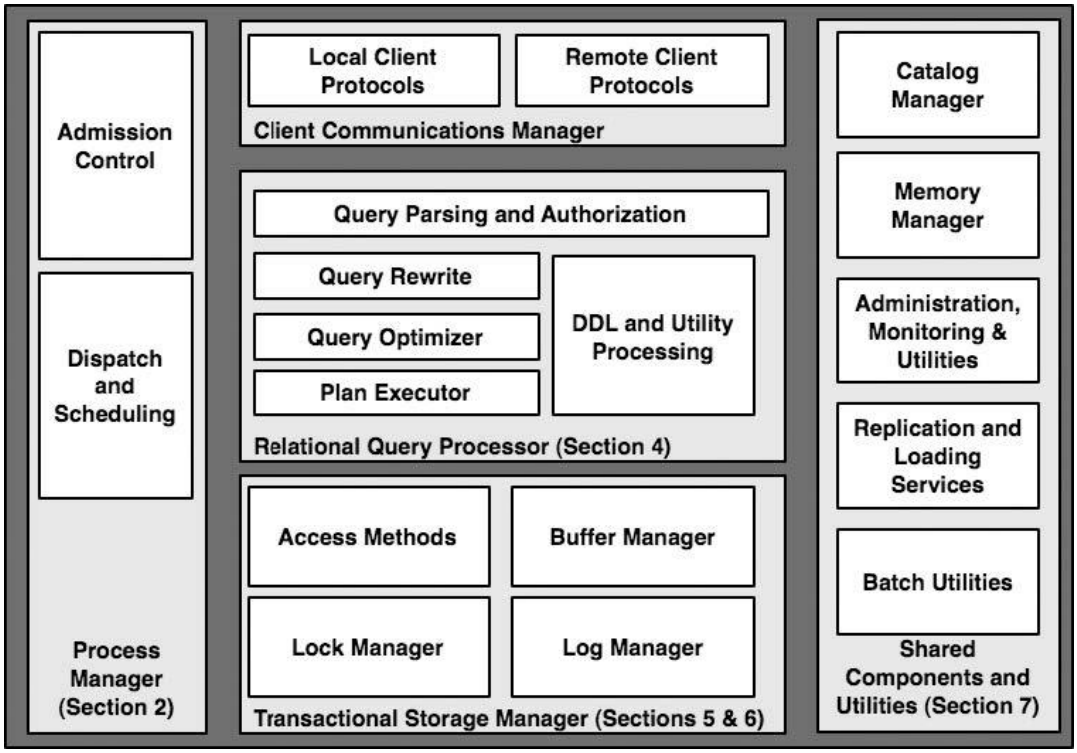

Figure 2. Intermediate database system architecture diagram

ISSN: 2414-1895 DOI: 10.6919/ICJE.202106_7(6).0010

3.2 Structural framework

In the oil and gas pipeline production control system based on SCADA and OPC (see Figure 3), in the process of processing data information, SCADA and OPC are performed on the same platform, and static and real-time data are used for management to improve practical work effectiveness.

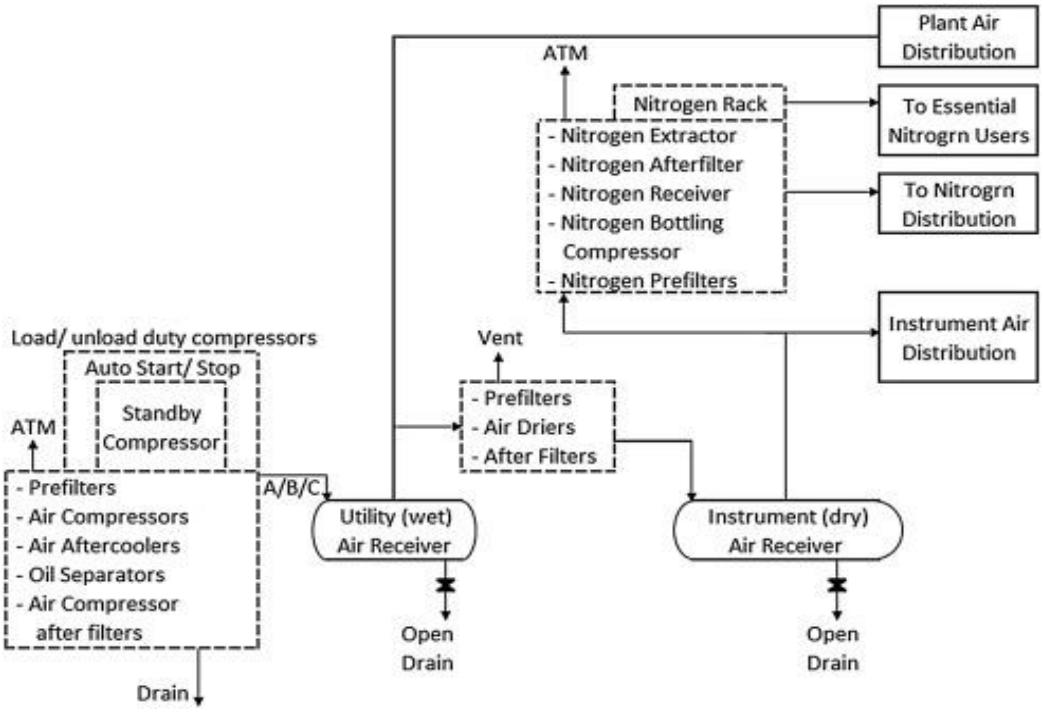

Figure 3. Block diagram of oil and gas pipeline production control and operation system based on SCADA and OPC

3.3 Function analysis

3.3.1 Visualization of leak detection location

There are many ways to detect leaks in oil and gas pipelines, and the practical results are very effective. However, to determine the specific location of the leak, you can only mark it in conjunction with mileage, a certain station and valve room, but it is still impossible to accurately determine the geographic situation. For example, whether there are rivers, vegetation, etc. in the location of the leak. In the past technical inspections, most of the staff made judgments based on their own accumulated work experience and proposed effective maintenance plans for failures [4]. However, after quoting SCADA and OPC systems, the staff can effectively solve the above problems based on OPC technology, because this technology It helps to clarify the coordinates, quantity and surrounding geographic environment of the specific leak location, so as to judge the specific situation of the accident.

3.3.2 Tracking and positioning of pigs

The pig is an important part of the production of oil and gas pipelines. At this stage, the method of determining the specific location of the pig is generally selected to integrate the odometer and negative pressure wave for research. The tracking technology of the pig is not perfect, combined with previous case studies, we can see that the station correction method has been used to clarify the specific location, but with the promotion of strapdown inertial navigation technology, the effect of tracking technology has been effectively improved. In the oil and gas control operation system based on SCADA and OPC, by quoting OPC technology, the calculated specific position information can be displayed on the screen, providing convenience for production control work and controlling the labor level of production and control workers.

ISSN: 2414-1895 DOI: 10.6919/ICJE.202106_7(6).0010

3.3.3 Batch tracking, positioning and display

Batch cutting is an important aspect to ensure the safety of oil pipeline transportation, and batch tracking is undoubtedly an important part of the pipeline production and operation process. Using hydraulic knowledge and changes in related parameters of pipeline operation can determine the batch position, and at the same time correct the batch error according to the parameters of the detection point (such as density) to obtain the accurate position of the batch, but the result is not intuitive enough, and there are manual labor The possibility of calculation errors [5]. To this end, it is possible to write related programs based on hydraulic algorithms, and use OPC to dynamically display the position of the batch interface in the pipeline, provide a reference for production control and operation, improve the level of intelligence, and reduce the impact of human factors.

3.3.4 Emergency rescue command and decision-making

Oil and gas pipeline accidents seriously endanger the environment, personal and property safety. Emergency command and rescue are important guarantees for reducing accident losses. The technical application status determines the level of emergency rescue plans. According to the current pipeline operation and management level, various oil and gas pipeline companies have formulated emergency plans of different levels. These plans are based on the current technical level and emphasize the organization and coordination relationship. Technically, they rely on the SCADA system and dispatching telephone system to complete the decision based on the on-site feedback information. Achieve an overall grasp of the on-site situation, such as the geographical situation of the accident site, the distribution of rescue materials, the distribution of rescue forces, and the detailed rescue route. Using OPC's spatial network analysis, buffer analysis, overlay analysis and visualization functions to assist emergency rescue command, the best rescue plan can be formulated to reduce accident losses.

3.3.5 Automatic distribution

The automatic distribution control function mainly formulates different control logics according to the gas supply characteristics of the distribution user, and automatically completes the various operations of the user distribution. The automatic distribution control logic of the station yard adopts the "4+1" mode: "4" represents 4 kinds of control logics, namely the uneven coefficient method, the residual average method, the arrival stop method and the constant pressure control method; "1" represents 1 control mode, namely manual mode. Different control logics can be used to realize automatic distribution and supply of gas according to the gas supply requirements of different users: 1) Use uneven coefficient control logic for users who cannot be interrupted and have gas supply pressure requirements; 2) Use the amount to stop transmission for users that can be interrupted Method control logic; 3) Use residual average method or output stop control logic for users without pressure limitation; 4) Use constant pressure control method or residual average flow logic for uninterrupted users with stable gas supply. The above 4 kinds of control logic are integrated into a set of automatic distribution control program to meet the automatic control needs of different users. The automatic and precise control specified by the day is realized by controlling the opening of the distribution regulating valve. Auxiliary protection logic such as low temperature protection, mode interlocking, and do not disturb switching is also added to the program to further ensure the safety and accuracy of the user's gas supply.

3.3.6 Intelligent control of metering branch

The intelligent control technology of the metering branch realizes the functions of priority control of the metering branch, automatic switching of branch failures, and automatic adjustment of the number of metering pipelines. When a valve, flow meter or flow computer failure is detected in the metering pipeline in use, the available metering pipeline with the highest priority in the pipeline is automatically opened, and the failed pipeline is automatically closed after the new pipeline is put into use [6]. At the same time, the program collects and monitors the working flow of each pipeline in use in real time. When it is detected that the working flow of any one of the flow meters in the pipeline is greater than the opening threshold, it will automatically open a spare channel with the highest priority Metering pipeline; when it is detected that the working flow of all flowmeters in the pipeline

ISSN: 2414-1895 DOI: 10.6919/ICJE.202106_7(6).0010

in use is not greater than the minus closing threshold value, the metering pipeline with the lowest priority level in the pipeline in use will be automatically closed to realize the control of the number of metering pipelines. Automatic control.

3.3.7 Cross-border data transmission

In order to ensure trade fairness, the natural gas pipeline project will set the natural gas measurement and transfer point at the center line of the Heilongjiang main channel of the boundary river. It is necessary to solve the problems of mutual transmission of measurement parameters, simulation calculation of junction parameters, and data security during the construction process. The Heihe first station needs to exchange data with Russia. In order to ensure the security of data communication between China and Russia, a DMZ data isolation zone was built at the first station of Heihe. Both China and Russia write data to the servers in the quarantine area, and the two parties obtain data from the other party by reading the data in the quarantine area servers to ensure that the control systems of China and Russia are in a mutually isolated and secure state. In order to ensure the stability and reliability of the data communication link between the two parties, the communication with Russia adopts a primary and one standby mode. The main communication channel is microwave and the backup communication channel is optical communication. When the Heihe first station transmits data to the customs, after passing through the one-way gatekeeper and firewall in the station control system control network, it is transferred to an independent customs server, which effectively blocks the possibility of data exchange between the customs and the Russian side, and enhances Improve the security of network data.

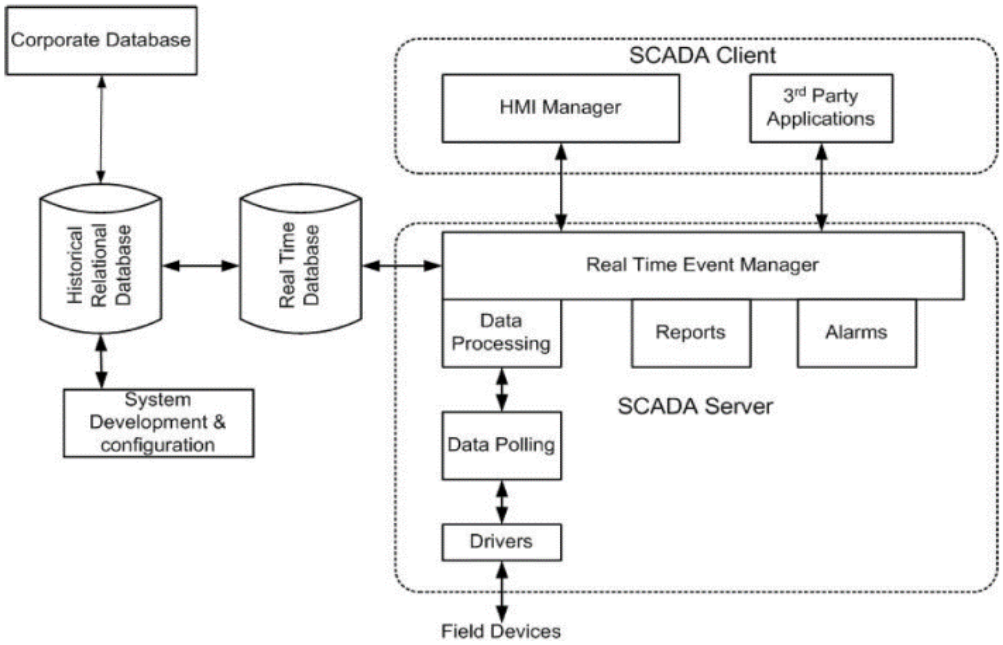

Figure 4. Schematic diagram of security division of oil and gas pipeline SCADA system

3.4 Safety protection

The oil and gas pipeline SCADA system belongs to the real-time control area, but some of its extended applications that are not involved in the implementation of control belong to the non-control production area. According to the importance of the application in the system and the degree of influence on the entire oil and gas control system, the networks and equipment with the same safety protection requirements are divided into a safe area, and the same or similar safety protection measures can be easily deployed in the same safe area. In different safety areas, different types and functions of safety protection equipment and products can be conveniently deployed, and at the same time, a complementary multi-level three-dimensional protection system can be formed. The oil and

ISSN: 2414-1895 DOI: 10.6919/ICJE.202106_7(6).0010

gas pipeline SCADA system is divided into six security domains: safety management domain, dispatch terminal domain, station yard and valve room domain, SCADA server domain, SCADA extended application domain, and regional company domain (Figure 4). The security management domain uses an independent virtual local area network (VirtualLocal Area Network, VLAN), and all devices are deployed in the computer room of the control center. The firewall is used as a security domain boundary isolation device, which is logically isolated from other security domains. Each set of servers in the SCADA server domain uses a separate VLAN, and all devices are deployed in the computer room of the control center, which is logically isolated from other security domains. The terminal operation domain uses an independent VLAN, and all devices are deployed in the operation room of the control center [7]. Each site uses an independent VLAN, and all devices are deployed in the local computer room operation room. The firewall is used as the security domain boundary isolation device, which is logically isolated from other security domains. Each system and workstation in the SCADA extended application domain uses a separate VLAN, and all devices are deployed in the computer room of the control center, logically isolated from other security domains. The regional company security domain is managed by each regional company and is isolated from other systems through a firewall.

4. Conclusion

The oil and gas pipeline production control and operation system is an important link to realize the normal and safe transportation of oil and gas pipelines. The performance of the system directly affects the safety of pipeline transportation and the smooth completion of transportation tasks. Therefore, more and more advanced technical methods are applied to the production of oil and gas pipelines. Controlling the operating system is an inevitable technological development. Introducing OPC technology into the oil and gas pipeline production regulation and operation system to guide the regulation and operation of the pipeline, so that the entire regulation and control work can be carried out more effectively, thereby improving the intelligent level of oil and gas pipeline production and regulation and operation. Judging from the current technological research status, there are still many difficulties in fully integrating OPC into the oil and gas pipeline production control and operation system. However, due to the needs of industry development and with the advancement of related technologies, the application of OPC will gradually expand, making a contribution to the digital construction of pipelines. contribution.

References

[1] Feng, Q., Li, R., Nie, B., Liu, S., Zhao, L., & Zhang, H. Literature review: Theory and application of in-line inspection technologies for oil and gas pipeline girth weld defection. Sensors, Vol. 17(2017) No. 1, p. 50-55.

[2] Zhensheng, W. A. N. G., Hongjun, D. O. N. G., Shibin, Z. H. A. N. G., Guohui, Z. H. A. O., Shu, Z. H. A. N. G., Dong, Y. U., ... & Ning, W. A. N. G. Control technologies for the one-key start and stop of compressor stations of gas pipelines. Oil & Gas Storage and Transportation, Vol. 38(2019) No. 9, p. 1029-1034.

[3] Kaiser, M. J. The global offshore pipeline construction service market 2017–Part I. Ships and Offshore Structures, Vol. 13 (2018) No. 1, p. 65-95.

[4] Liang, Y. K., Yang, F. M., Yin, Z. Q., & Chen, B. Accident statistics and risk analysis of oil and gas pipelines. Oil & Gas Storage and Transportation, Vol. 3(2017) No. 6, p. 472-476.

[5] Zhang, G., Li, B., Zheng, D., Ding, G., Wei, H., Qian, P., & Li, C. Challenges to and proposals for underground gas storage (UGS) business in China. Natural Gas Industry B, Vol. 4(2017) No. 3, p. 231-237.

[6] Wang, X., & Duan, Q. Improved AHP–TOPSIS model for the comprehensive risk evaluation of oil and gas pipelines. Petroleum Science, Vol. 16(2019) No. 6, p. 1479-1492.

[7] Gómez, C., & Green, D. R. Small unmanned airborne systems to support oil and gas pipeline monitoring and mapping. Arabian Journal of Geosciences, Vol. 10(2017) No. 9, p. 202-209.