ISSN: 2414-1895 DOI: 10.6919/ICJE.202104_7(4).0008

A Design of Lantern's Lighting Control System Based on STM32F7 MCU

Hao Pi[a], Yan Shi

School of Mechanical Engineering, Sichuan University of Science & Engineering, Zigong 64300, China.

[a]976420823@qq.com

Abstract

This paper introduces the design of a new lantern's lighting control system, and gives the design details. The system takes STM32F7 Series MCU as the main control core, based on the embedded operating system μcos-Ⅲ, expanded I/O module 74HC595 and RGB tricolor lighting bead, and has the upper computer programming and control functions to realize the transmission and control of the color scheme. The system has the advantages of small volume, full function and easy operation.

Keywords

Lighting Controller of Lantern; MCU; Embedded Operating System.

1. Introduction

China's Lantern Festival culture has a long history, exquisite skills, renowned at home and abroad, is the precious intangible cultural heritage of the Chinese nation. The Lantern Festival has driven a series of industries and created considerable material and spiritual wealth. In addition, many occasions such as buildings and streets also need color lights to set off the atmosphere, so the demand for color light controller will increase with each passing day [1-4]. However, most of the color lantern controllers on the market are realized by PLC[5]. With the increase of characteristic demand, PLC can not add modules at will and other problems become more prominent, PLC flexibility will be greatly reduced. The controller based on MCU can add modules such as gyroscope, infrared thermal sensor, audio input and output, man-machine interface, video input and output, etc.; in addition, the cost of PLC is high. For the industry of large-scale use of controller such as lantern exhibition, one booth corresponds to one PLC controller, which is quite expensive; moreover, in the design and debugging stage, the cost of PLC is high In this section, PLC should be written by professional PLC programmers, which is not friendly to the lantern artists and limits the implementation of their own design ideas[6-10].

This paper presents a design of RGB color lantern control system based on STM32 MCU. The hardware system of this scheme takes STM32F767IGT6 as the main control core, uses 74HC595 chip to expand the output port, and uses isolation and amplification circuit to expand the number of output control ports, so as to ensure the use requirements of large-scale color lantern control occasions; the lighting bead uses a special rectifier chip (GS1903), and outputs the corresponding PWM signal to control the RGB lighting bead according to the received signal. The software system of color lantern controller is based on Hal library and μ cos - III hard real-time embedded operating system Application programming (Application Programming) online programming technology, program code and lantern data are stored in different areas of flash; PC software is based on WinAPI serial communication technology, which connects with lantern controller through serial communication technology, and sends the designed lantern data to lantern controller to complete program download

ISSN: 2414-1895 DOI: 10.6919/ICJE.202104_7(4).0008

and update. Therefore, compared with the ordinary color light controller, the design of color light controller has the advantages of flexible use, powerful function, strong stability, low price and so on.

2. The Overall Design of System

The Lantern's Lighting system adopts the idea of modular design. According to the different division of hardware, the core control board, peripheral drive board and lantern belt are designed separately. The core control board is connected with the host computer in the download and debugging stage. The host computer downloads the control data and control scheme to the flash memory chip in the core control board through the serial port. The peripheral drive board is connected with the 220 V AC voltage through the power adapter, which is converted into the appropriate DC voltage through the voltage stabilizing rectifier device to provide the power for the upstream core control board and the downstream lantern belt with + 12 V voltage drive respectively, and provide the required power for its own conversion chip. The whole color lantern controller system is controlled by the μ cos - III program. According to the needs, the user can set the number of lighting groups and lighting depth of the light band through the upper computer, and realize the gorgeous change effect through the carefully designed lighting array.

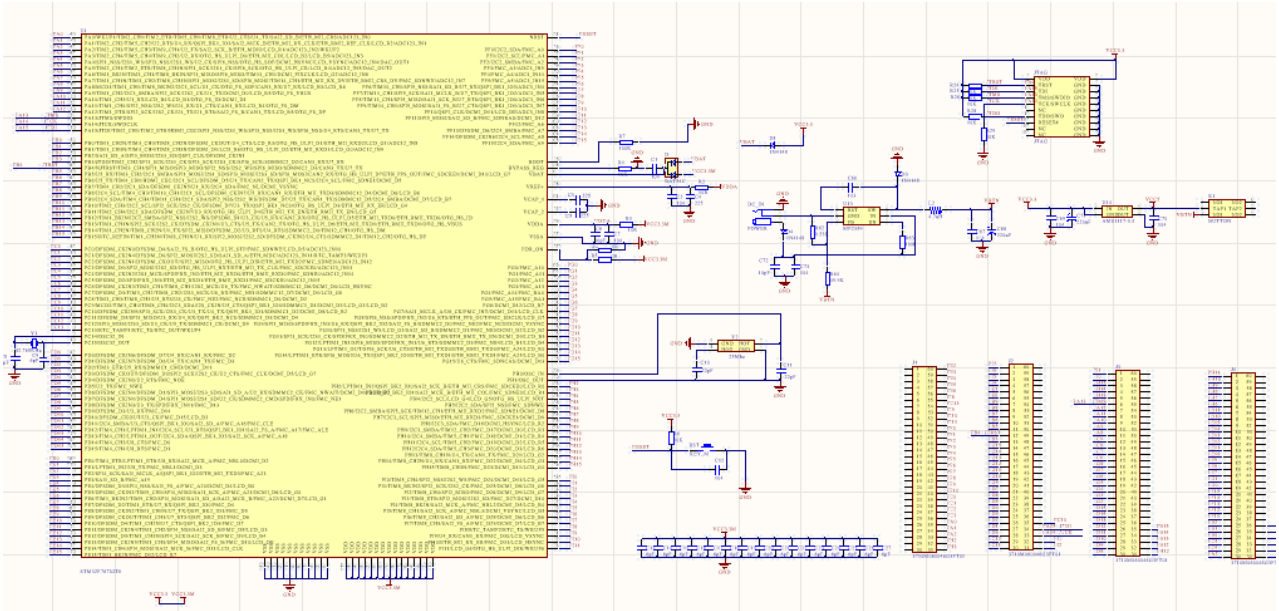

a) Schematic diagram of core board

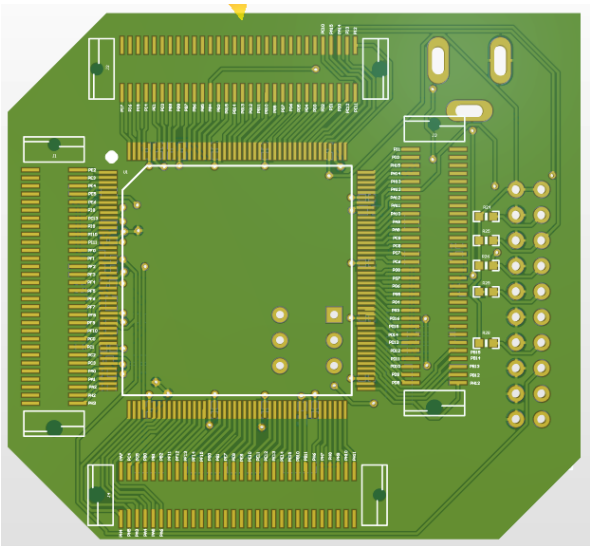

b) The PCB of core board

Fig. 1 The core board

ISSN: 2414-1895 DOI: 10.6919/ICJE.202104_7(4).0008

3. The Hardware of System

The hardware of the the Lantern's Lighting system consists of three modules: core control board (STM32F767IGT6 main control module), peripheral drive board (74HC595 chip, voltage regulator, MOS tube, etc.) and lantern band (GS1903 chip, RGB lighting bead).

3.1 Core Control Board of System

In this project, STM32F767IGT6 MCU of STM32F7 series is selected as the main control core. STM32F767IGT6 chip has 196 external connecting pins in total. In addition to the pins necessary for the smallest system, 110 output pins can be led out to form 35 groups of lanterns with external interfaces. The circuit diagram of the core board is shown in Figure 1. The essence of the core board is the minimum system of single chip microcomputer, which is composed of indicator light, download circuit and voltage stabilizing circuit [20].

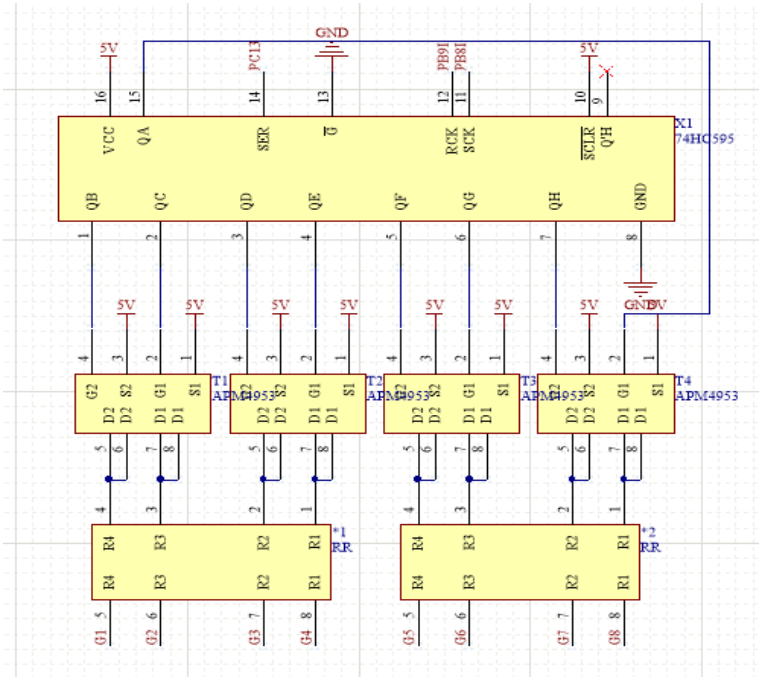

a) Schematic diagram of a group of external output interface

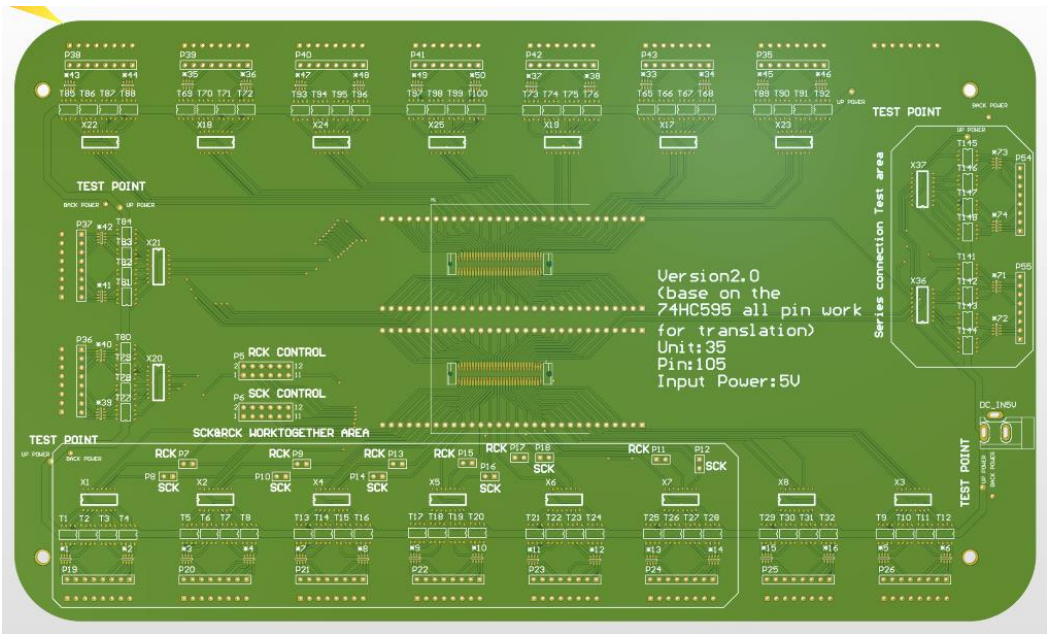

b) The PCB of Peripheral drive board

Fig. 2 The Peripheral drive board

ISSN: 2414-1895 DOI: 10.6919/ICJE.202104_7(4).0008

3.2 Peripheral Drive Board of System

The peripheral board is composed of serial to parallel chip (74HC595), voltage stabilizing chip, indicator light, etc. it completes the functions of signal I/O port expansion, power supply, signal isolation, etc. Chip 74HC595 is a displacement buffer with 8-bit serial input and parallel output, which has the function of parallel output as three state output. When the chip works, at the rising edge of SCLK, the serial data is input to the internal 8-bit displacement buffer by DIN, and the parallel output is to store the data in the 8-bit displacement buffer into the 8-bit parallel output buffer at the rising edge of RCLK. When the control signal of SCLK at the serial data input is low enable, the output value of the parallel output is equal to the value stored in the parallel output buffer [23]. Therefore, in order to drive the chip, a signal input pin, a SCLK control pin and a RCLK control pin will be provided.

The schematic diagram of the peripheral board is shown in Figure 2. The MCU controls the RCLK, SCLK and din pins of the 74HC595 chip by the three pins. Through the change of the clock signal, the serial signal from the MCU pin is shifted to 8-bit parallel signal, and the output is completed according to the required gap according to the master control clock. 0 code, 1 code and reset signal are required to reach the lantern bead module.

3.3 Lighting Core of System

The lantern bead module consists of three RGB lighting beads, a GS1903 chip and auxiliary electrical components. Complete the function of receiving the control signal and lighting the lantern bead according to the signal. The lantern bead schematic diagram is shown in Figure 3.

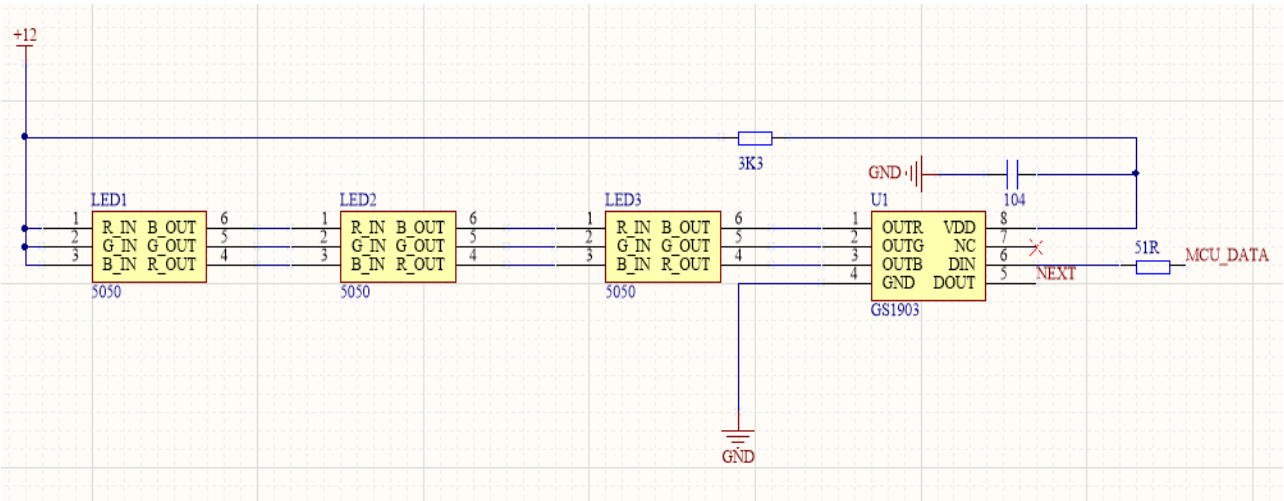

a) The Schematic of lighting core

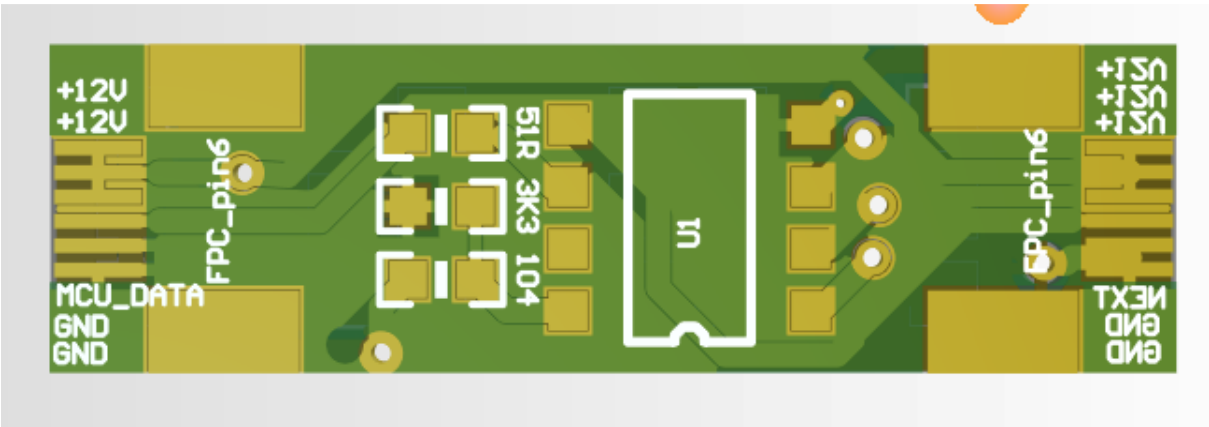

b) The PCB of lighting core

Fig. 3 The Lighting Core

ISSN: 2414-1895 DOI: 10.6919/ICJE.202104_7(4).0008

Each lantern bead has three RGB lanterns and a GS1903 rectifier chip. Three of the RGB beads are closely arranged horizontally, and the rest of the resistors and capacitors are properly filled with gaps. It is necessary to minimize the whole bead, so that the connected lantern band can have better flexibility and cope with more difficult use environment. The lantern beads are connected by flexible cables to form a lantern belt, and the shell is sealed with soft plastic to prevent dust and water.

4. The Software of System

he embedded operating system μ cos - III establishes task stack for each output unit, adopts time slice rotation scheduling to maintain the concurrent operation of all control unit ports; the upper computer program is based on MFC program class library, and uses WinAPI to write serial communication protocol to carry out serial communication and program download for the color lantern controller. The program of the system, the software of the upper computer and the hardware of the color lantern controller work together.

4.1 The Framework of Software

According to the specific control and work requirements, the task frame structure of the color lantern control system is established [10]. The software flow chart is shown in Figure 4.

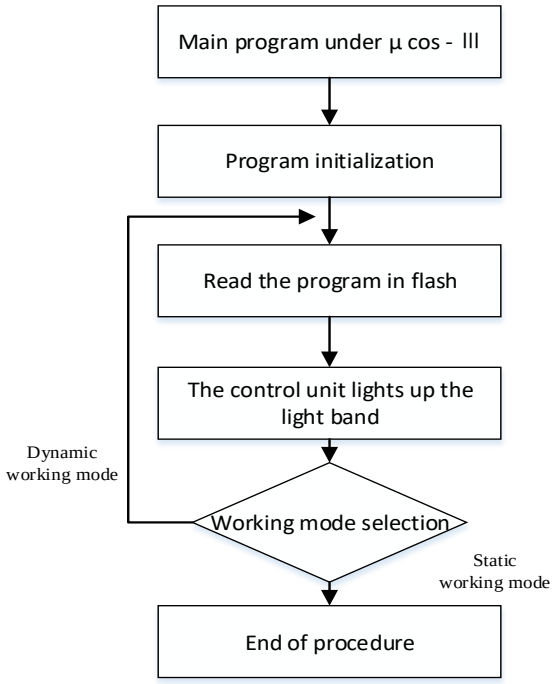

Fig. 4 The software flow chart

4.1.1. Create each group of control unit tasks

Taking an output group composed of pb10, pb11 and pH8 as an example, pb10 is used as SCLK as shift clock, pb11 as rCLK as concurrent clock, and pH8 as serial data input DIN pin. According to the number of 110 pins and the distance between the pins, 35 groups of control units can be established, so 35 groups of color lantern tasks need to be established.

4.1.2. Setting time slice rotation scheduling function

Time slice rotation scheduling will ensure that each group of control units work concurrently and simultaneously, especially in dynamic mode. In the operating system of μ cos - III, the time slice rotation scheduling function is turned on and off in the form of macro definition. The test shows that when the length of time slice is 10ms, the color changes normally, the appearance is beautiful, the refresh frequency is reasonable and natural.

ISSN: 2414-1895 DOI: 10.6919/ICJE.202104_7(4).0008

4.1.3. System memory code segment protection

The color light control data adopts the mode of mutually exclusive semaphore to protect the shared code, which is written in the erasure area of IAP. The upper computer transmits the data here. IAP program has two functions: 1. Programming app program; 2. Guiding program to jump to application program. The color used in the data array of color lantern control when brushing the screen is compared with the change value received to guide the MCU to output the appropriate signal code.

4.2 Work Function of System

4.2.1 Control unit working module

The pin selection function is designed. The pin module is encapsulated with the return type empty, and the calling and control can be realized by inputting the pin numbers.

The function code is as follows:

```
void GPIOX_num(GPIO_TypeDef* GPIOx,uint16_t GPIO_Pin)
{
    int i;
    int j;
    int k;
    for(i=0;i<35;i++)// 35 group control uint
        {
            for(j=0;j<24;j++)//The depth of light are 24
                {
                    k=(zifu[i]<<(8+j))>>31;// Take the array of color lantern
control data and read it by shifting
                    switch(k)
                        {
                            case(0):
                                S_0_(GPIOx,GPIO_Pin);//send 0
                            case(1):
                                S_1_(GPIOx,GPIO_Pin);//send 1
                        }
                        RE_SET(GPIOx,GPIO_Pin);//sendRESET code
                }
            }
}
```

In Hal base, keywords such as GPIO are reserved special characters. Here, we should pay attention to the time interval between 0 code and 1 code. Considering that the timing interval of RGB driver chip once reached 30 μ s, we can not use a simple delay function. Adjust the core code of the chip to achieve the maximum working frequency of 216hz.

4.2.2 Peripheral board driver code module

Peripheral board driver module controls the forwarding and concurrency of I / O port. This project uses 74HC595 chip to complete this function. 74HC595 chip has the advantages of cheap, easy to get, safe and reliable, and is one of the signal processing chips widely used in the lantern industry and advertising decoration industry [15].

The driver code is as follows:

ISSN: 2414-1895 DOI: 10.6919/ICJE.202104_7(4).0008

```
void HC595Send(u8 data)
{
  u8 i,j;
  for(i=0;i<100;i++)
     {
          data=DATA[i];
     }
for(j=8;j>0;j--)
     {
          if(data&0x80)// Check whether the status register is completed, and the result
is obtained by bit and comparison
               HC595_DATA_H();//read data
          else
               HC595_DATA_L();
               HC595_CLK_L();
               delay(1);
               data<<=1;
               HC595_CLK_H();
               delay(1);
   }
}
```

3, Lantern driver code

code is as follows

(1)GS1903's 0 code

```
void S_0_(GPIO_TypeDef* GPIOx,uint16_t GPIO_Pin)
{
    HAL_GPIO_WritePin(GPIOx,GPIO_Pin,GPIO_PIN_SET);
    delay_us(300);
    HAL_GPIO_WritePin(GPIOx,GPIO_Pin,GPIO_PIN_RESET);
    delay_us(900);
}
```

(2)GS1903's 1 code

```
void S_1_(GPIO_TypeDef* GPIOx,uint16_t GPIO_Pin)
{
    HAL_GPIO_WritePin(GPIOx,GPIO_Pin,GPIO_PIN_SET);
    delay_us(900);
    HAL_GPIO_WritePin(GPIOx,GPIO_Pin,GPIO_PIN_RESET);
    delay_us(300);
}
```

(3)GS1903's RESET code

```
void RE_SET(GPIO_TypeDef* GPIOx,uint16_t GPIO_Pin)
{
    HAL_GPIO_WritePin(GPIOx,GPIO_Pin,GPIO_PIN_RESET);
    delay_us(900);
}
```

ISSN: 2414-1895 DOI: 10.6919/ICJE.202104_7(4).0008

4.3 Upper Software of System

Take vs2017ide environment. To configure MFC document project, the application document is "single document", the project style is "MFC standard", and the classic menu option is "None". The main interface of the software is shown in the Figure5.

Fig. 5 The UI of software

4.3.1 Part of parameter setting of combination list control

Table 1 lists some important control parameters.

Table 1. Important control parameters

Name	General Selection	Data Selection		Styles selection	
Port number combo box	ID	IDC_COMBO_COM	COM1 COM2 COM3 COM4 COM5 COM6	Y Class	DropList
				Sort	No Choese
Baud rate combo box	ID	IDC_COMBO_B	19200 9600 4800 2400	Y Class	DropList
				Sort	No Choese
Parity combo box	ID	IDC_COMBO_P	No check Odd checkEven check	Y Class	DropList
				Sort	No Choese
Cell selection combo box	ID	IDC_CHO_NUM	1~35	Y Class	Drop List
				Sort	No Choese

4.3.2 Program configuration box data

Table 2 shows the Configuration is related to depth and color.

ISSN: 2414-1895 DOI: 10.6919/ICJE.202104_7(4).0008

Table 2. Program configuration

Depth	Color
1-5	red
6-10	yellow
11-50	blue
51-124	green
125-160	white
160-…	Others

After input according to the program. Suppose that 1-5, 6-10, 11-50 and 51-124 of a light strip need to be set to red, yellow, blue and green respectively, then the corresponding control unit port should be set according to the table in the program. After setting, click the download button to download the program to the control data of the color lantern controller.

5. Summary

The Lantern's Lighting control System designed in this paper can not only work in the static mode, download the control data to the lantern band for modeling artists to use, but also work in the dynamic mode. According to the designed data array of the color lantern control, the required pattern is displayed on the screen, showing the gorgeous lighting effect. The supporting upper computer program enables the lantern artists to quickly realize their lantern ideas, which has a good user experience.

References

[1] Zhong Tianyun. The design of the color lamp controller [J]. Electronic Technology, 2018, 47(01): 72-74.

[2] Yan Feng, Chen Xueying. The design of infrared remote control lantern controller based on FPGA[J]. Modern Electronic Technology, 2015, 38(19): 40-42.

[3] Sun Leiming, Ji Xiaobang. The design and realization of the color light controller[J]. Science and Technology Wind, 2015(17):77.

[4] Feng Yueqin. The application of 4-bit RGB LED lantern controller PCA9633 [J]. Microcomputers and Applications, 2015, 34(07): 30-33.

[5] Zhu Bin. Production of 51 single-chip LED lantern serial controller [J]. Science Education Journal (Early Issue), 2014(06): 205-206.

[6] Gao Yun. The design of the eight-way lantern controller [J]. Electronic Production, 2013(16): 5.

[7] Xu Liangxiong. The design of color lamp advertising screen controlled by PLC[J]. Manufacturing Automation, 2012, 34(21): 126-127+153.

[8] Guo Shuibao, Gao Yanxia, Wang Daohong. Design of LED lantern controller based on AT-89C51 single-chip microcomputer [J]. Modern Electronic Technology, 2005(06): 119-122.

[9] Zhao Mingfu. CPLD-based color lamp controller [J]. Microcomputer Information, 2005(05): 49-50.

[10] Li Yuecheng. µCOS-III source code analysis notes [M]. Machinery Industry Press, 2016.

[11] Cao Feifei, Zhao Yongfa. Visual C++ Program Development Example Collection [M]. People's Posts and Telecommunications Publishing House, 2016.

[12] Zhang Xuewu, Jiang Bing, Zhang Zhuo. Embedded system principle and interface technology [M]. Publishing House of Electronics Industry, 2012.

[13] Cao Weibin. Programming practice of typical application examples of C/C++ serial communication [M]. Publishing House of Electronics Industry, 2019.

[14] Yang Xin, Len D M Nokes, Wang Yufeng, Liu Xiangqian. Electronic design from scratch [M]. Tsinghua University Press, 2014.

[15] Guo Tianxiang. 51 Single Chip Microcomputer C Language Tutorial: A Guide to Getting Started, Improving, Developing, and Expanding [M]. Publishing House of Electronics Industry, 2012.

ISSN: 2414-1895 DOI: 10.6919/ICJE.202104_7(4).0008

[16] Li Qunfang. Single-chip microcomputer and interface technology [M]. Publishing House of Electronics Industry, 2011.

[17] Ren Zhe. MFC Windows application programming [M]. Tsinghua University Press, 2004.

[18] Liu Shuzhi. Visual C++ serial port communication and engineering application practice [M]. China Railway Publishing House, 2011.

[19] Zhang Zheng, Sun Baoshan, Zhou Tianli. Windows programming [M]. People's Posts and Telecommunications Press, 2015.

[20] STM32F7 Development Guide-HAL Library Version_V1.0[G]. Guangzhou Xingyi Electronic Technology Co., Ltd.

[21] STM32F767 UCOS Development Manual_V1.0[G]. Guangzhou Xingyi Electronic Technology Co., Ltd.

[22] STM32F7 Chinese Reference Manual [G]. STMicroelectronics, 2015.

[23] Yan Shi. Fundamentals of Digital Electronic Technology [M]. Higher Education Press, 2007.