ISSN: 2414-1895 DOI: 10.6919/ICJE.202104_7(4).0034

Design of Room Safety Alarm System based on MCU

Haibo Guo, Shuhang Chen, Shengyang Yin

College of information science and technology (College of network security, Oxford Brooks College), Chengdu University of Technology, Chengdu, China, 610059, China.

Abstract

In this design, the single-chip microcomputer as the core device for the design of the room security alarm system, and equipped with sensors to collect indoor smoke concentration, temperature, human body infrared radiation, the sensor will collect the data through the circuit to A / D conversion circuit, converted into digital signal, and then transmitted to STC89C52 MCU for data processing and comparison, and make a judgment, if the judgment is Yes, the alarm circuit will alarm and the light circuit will work. In this design, DS18B20 working circuit is used as temperature acquisition module, MQ-2 working circuit is used as smoke collection module, HC-SR501 working circuit is used as infrared radiation detection module. Taking STC89C52 as the main control template, the collected signal is collected and processed, and compared with the preset value to judge whether the alarm circuit is triggered. If it is judged as yes, the alarm module with buzzer will give an alarm finally. This system design has the advantages of reliability, simple system structure, high cost performance and low power consumption.

Keywords

Temperature; Smoke; Pyroelectric Sensor; Single Chip Microcomputer.

1. Introduction

The 21st century is an era of rapid development, with the improvement of people's living standards, the security risks in the home are also gradually increasing. In order to eliminate the hidden danger in time and eliminate people's worries about fire, gas leakage and burglary, the fire prevention and theft alarm system has become an indispensable part of our daily life. Fire alarm system is to determine whether to alarm by judging the smoke concentration, temperature and other variables in the room. In addition to indoor fire and gas leakage, indoor theft is also a problem to be solved. At present, China's population base is huge, the distribution is dense, there are many residential buildings in the city, so how to effectively solve this kind of problem is a top priority, in this room security alarm system design, this kind of problem can be fully solved.

2. Overall system design

The design includes hardware module and software module. The design of hardware module includes STC89C52 MCU, DS18B20 temperature sensor, MQ-2 smoke sensor, HC-SR501 human body infrared sensor and so on. The alarm system mainly achieves the alarm function by monitoring the indoor temperature, smoke concentration and infrared radiation of human body. When someone intrudes into the room, the infrared sensor installed in the indoor monitoring point can detect the infrared heat radiated by human body, and then trigger the alarm circuit alarm after system analysis. When a fire occurs, the smoke concentration in the indoor air will increase, and the temperature will also rise. Then the smoke sensor and temperature sensor will collect the surrounding environment variables through A/D conversion circuit into digital signals and transmit them to the MCU. After comparing with the previously set threshold value, the final judgment is whether to trigger the alarm

ISSN: 2414-1895 DOI: 10.6919/ICJE.202104_7(4).0034

circuit. In the software module, Proteus 8.0 is used to simulate. The MCU STC89C52 module, key circuit module, display circuit module, sensor module and alarm circuit module are constructed and connected according to the circuit schematic diagram. After the connection, the online simulation is run.

3. Hardware circuit design

3.1 Design of minimum system of single chip microcomputer

The minimum system of single chip microcomputer, also known as the minimum application system, refers to the system that can work with the least number of components. For STC89C52 series single-chip microcomputer, its minimum system components generally include: 51 series single-chip microcomputer, reset circuit, crystal oscillator circuit. Crystal oscillator circuit is generally composed of a crystal oscillator, two capacitors C and XTAL1, XTAL2 pins. The reset circuit generally resets the MCU by the RST end of the pin. After the MCU starts for 0.1s, the voltage at both ends of the capacitor C is continuously charged to 5V. This is when the voltage at both ends of 10K resistor is close to 0V, and RST is at low level, so the system works normally. When the key is pressed, the switch is on. At this time, a circuit is formed at both ends of the capacitor, and the capacitor is short circuited. Therefore, during the process of pressing the button, the capacitor begins to release the power previously charged. With the passage of time, the voltage of capacitor is released from 5V to 1.5V in 0.1s, or even smaller. According to the series circuit voltage is the sum of all parts, at this time, the voltage at both ends of 10K resistor is 3.5V or even greater, so RST pin receives high level again. Single chip microcomputer system reset automatically. The specific circuit diagram design is shown in Figure 2 below.

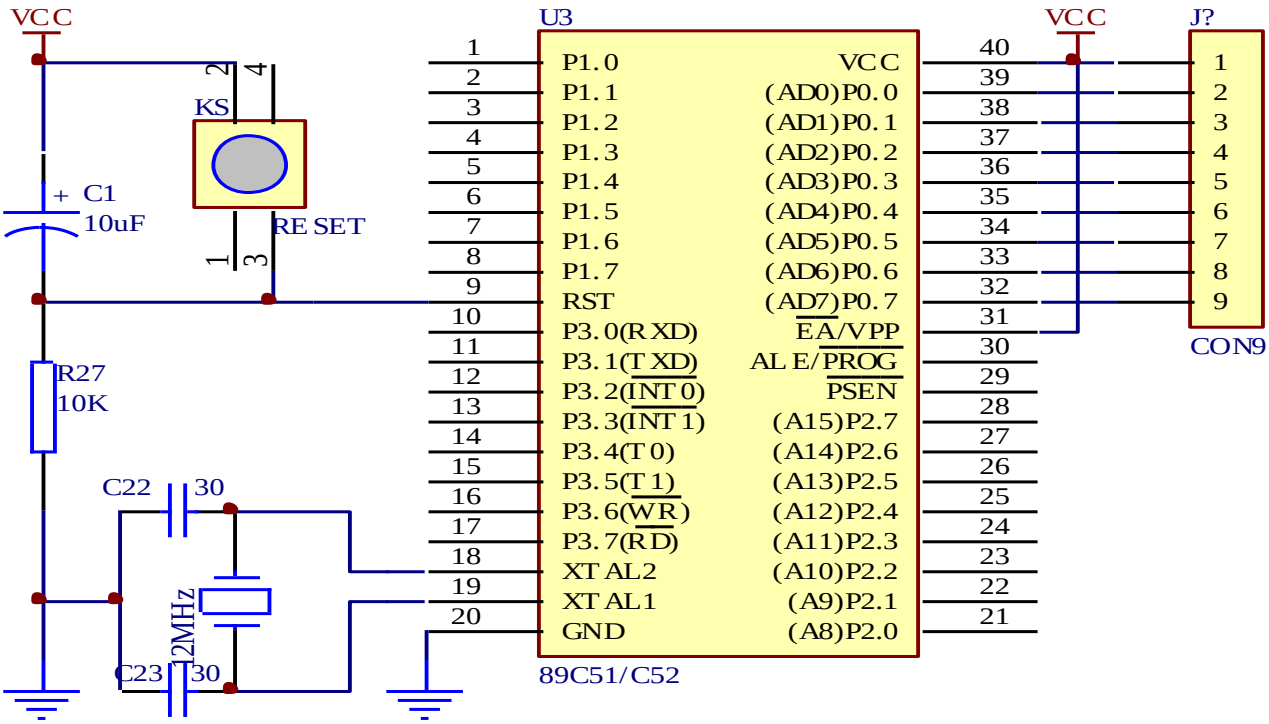

Figure 1. Minimum circuit of single chip microcomputer

3.2 Design of smoke detection circuit

LM393 is an operational amplifier, which is used as a voltage comparator. The main principle of the voltage comparator is that when the input voltage V + > V -, the output is high level, when the input voltage V + < V -, the output is low level (here the second pin is V -, the third pin is V +, and the first pin is output).

ISSN: 2414-1895 DOI: 10.6919/ICJE.202104_7(4).0034

U2 is a smoke detection probe, which forms a loop with R7 and R8. R7 and R8 play the role of partial voltage. R6 adjustable resistance regulates the V+ input voltage of the comparator. Under normal conditions, the voltage of v-input end of the comparator is lower than that of V+ input end, that is, the output high level; when smoke/combustible gas is detected, the resistance in mq-2 becomes smaller. According to the principle of partial pressure, the smaller the resistance, the lower the voltage The v-voltage is increased, so V->V+, the comparator output is low level, so the indicator light D1 is turned on and on. The microcontroller detects the smoke / combustible gas by judging that the pin is low level and starts the alarm. The specific circuit diagram is shown in Figure 3 below.

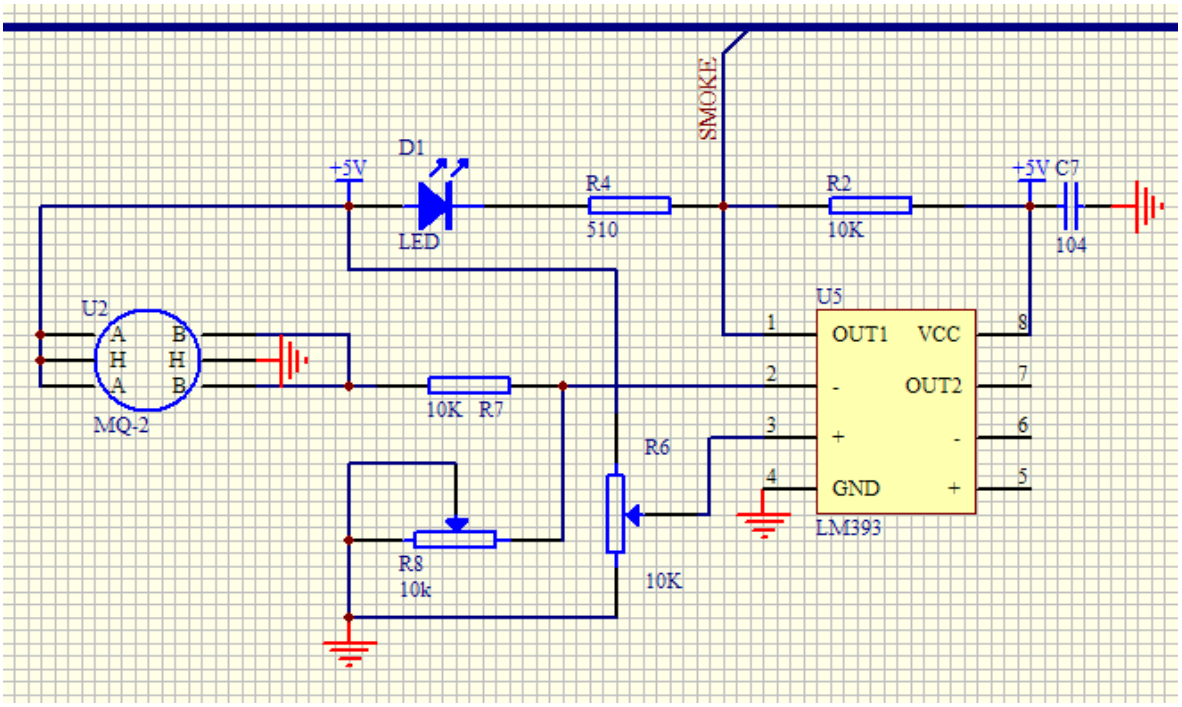

Figure 2. Smoke detection circuit

3.3 Design of temperature detection circuit

Through single bus protocol, MCU reads the data from DS18B20 and calculates, and finally gets the temperature value. R18 is pull-up resistor, which is used to enhance anti-interference ability. The specific circuit diagram design is shown in Figure 4 below.

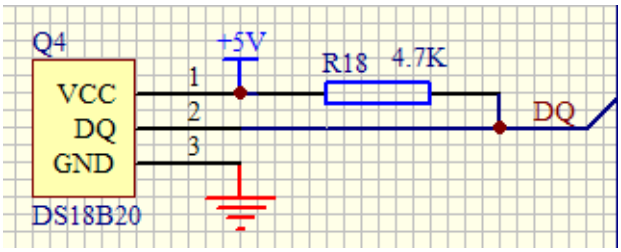

Figure 3. Temperature detection circuit

3.4 Design of infrared detection circuit for human body

J1 is the socket of human body infrared module. When there is a person, the second pin outputs high level. After R12 current limiting, the triode Q1 is turned on. At this time, the collector of triode is grounded, that is, trip is low level, and LED lamp D3 is on. The MCU knows someone by judging trip is low level.

ISSN: 2414-1895 DOI: 10.6919/ICJE.202104_7(4).0034

C1 is a filter to make the power supply + 5V cleaner. R10 is also a pull-up resistor. When there is no one, the triode is cut off and trip becomes a high level through this pull-up resistor. The specific circuit diagram design is shown in Figure 5 below.

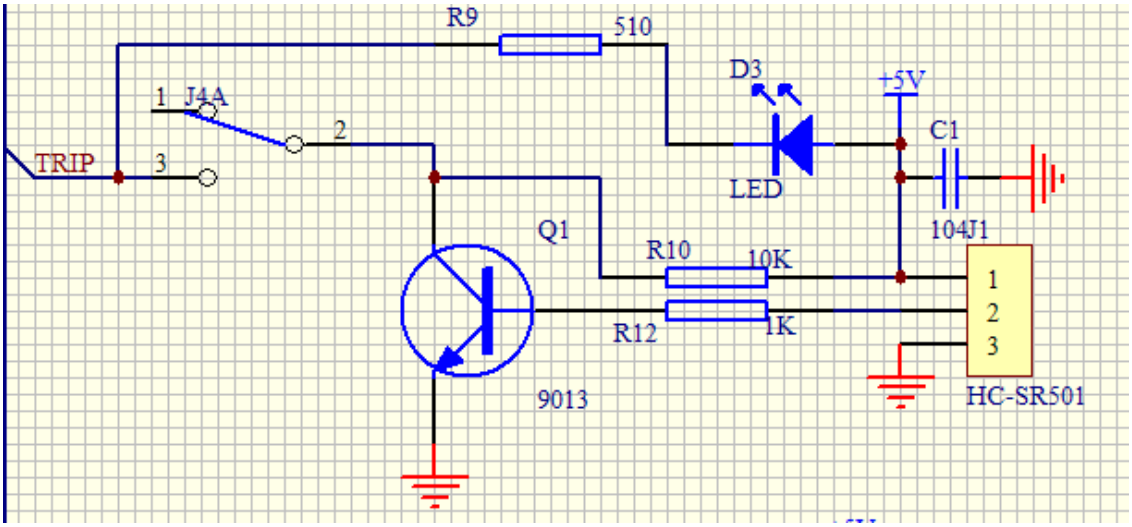

Figure 4. Human body infrared detection circuit

3.5 Design of buzzer alarm circuit

MCU controls the high and low level of beep to make the buzzer and led work. Q7 is a triode, NPN type, so here beep is at high level, the triode is on, the buzzer and LED lamp are grounded and powered on. On the contrary, at low level, the triode is cut off, and the buzzer and LED are not powered. R34 is a pull-up resistor, which makes the current of IO port increase at high level, which is enough to make the buzzer work normally. Both R35 and R36 are used to limit current to protect triode and LED devices. The specific circuit diagram design is shown in Figure 6 below.

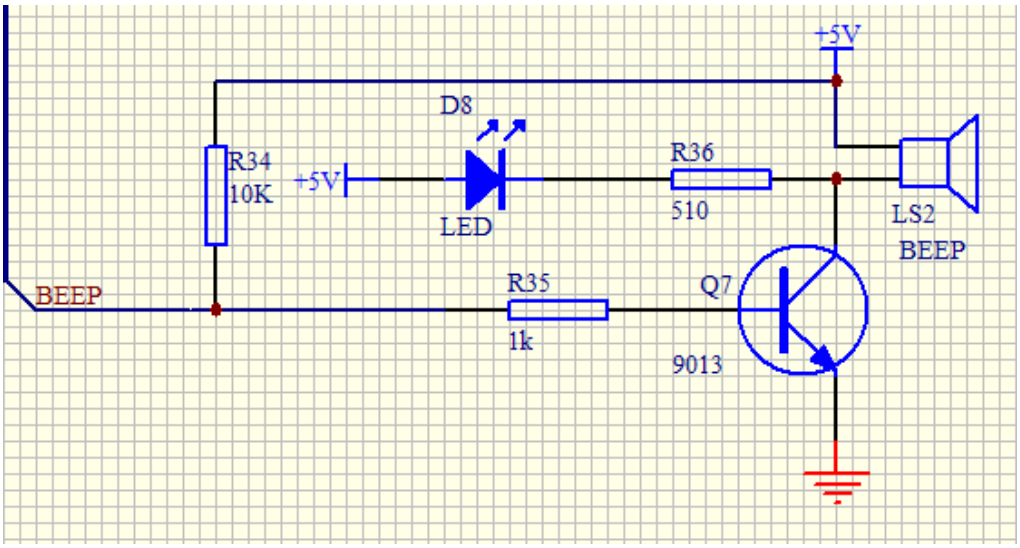

Figure 5. Buzzer alarm circuit

4. Simulation and debugging

Proteus is a kind of software which can simulate the system composed of single chip microcomputer. It can not only draw the circuit simulation schematic diagram, but also can carry on the on-line

ISSN: 2414-1895 DOI: 10.6919/ICJE.202104_7(4).0034

simulation to the single-chip microcomputer and related circuits, and test whether the early design achieves the expected function and effect, so as to reduce unnecessary time and material cost consumption. Generally, Proteus Software is used to test the early design, test whether the alarm system can achieve the expected alarm response, and whether each link can work normally, which can effectively eliminate the software and hardware problems and provide the verification of the preliminary scheme.

Using Proteus 8.0 simulation, build single-chip STC89C52 module, key circuit module, display circuit module, each sensor module, alarm circuit module, and connect them according to the circuit schematic diagram. After the connection is completed, the online simulation is run.

5. Summary

This design is based on STC89C52 microcontroller room safety alarm device, which is a kind of intelligent security alarm system for ordinary families. The alarm system meets the needs of people. It uses three kinds of sensors to monitor the indoor safety in real time. It can effectively eliminate people's concerns about burglary, fire, gas leakage and other dangerous situations, so as to improve people's quality of life and safety factor.

References

[1] Jing Li. Design and Development of Marine Temperature Data Recorder System Based on Single-Chip Microcomputer[J]. Journal of Coastal Research, 2020,106(sp1).

[2] Jiangnan University; Patent Issued for Intelligent Car Garage-Moving Device Based On Single-Chip Microcomputer Control (USPTO 10,612,260) [J]. Journal of Engineering, 2020.

[3] Hongxia Xu. Design of Water Tank Liquid Level Control System Based on Single Chip Microcomputer[J]. International Journal of Computational and Engineering, 2020,5(1).

[4] Wei-ci LIU, Jian-xing LI. Design of Intelligent Wireless Sensor Based on Single-chip Microcomputer[A]. Advanced Science and Industry Research Center. Proceedings of 2019 International Conference on Artificial Intelligence, Control and Automation Engineering (AICAE 2019) [C]. Advanced Science and Industry Research Center:Science and Engineering Research Center,2019:3.

[5] Lu Yang, Shigang Hu, Zhijun Tang. Design of Electronic Piano Based on Single-chip Microcomputer[J]. Social Science Studies, 2019,2(2).

[6] V. Karthik. Eco Friendly Pollution Control System Using Smoke Sensor and Cloud [J]. International Journal of Emerging Trends in Science & Technology, 2018,4(1).

[7] Min Deok Ho, Jeong Min Jae, Kim Hyung Jin, Seo Young Ho, Kim Byeong Hee. Distance Measurement Using Infrared Sensor On Curved Surface[J]. Journal of Industrial Technology,2017,37(1).

[8] B. Gowthami, S. Sowmya, S. Iswarya, S. Viswanathan. Anti-Theft Door Arrangement with Implementation of Built-In Passive Infrared Sensor[J]. Automation and Autonomous Systems, 2015,7(4).

[9] P.R. Hall, J.M. Smith. Infrared Sensor Technology[J]. Optica Acta: International Journal of Optics, 2010, 30(10).

[10] Gould D., Gardiner D. P., LaViolette M., Allan W. D.. Further Development of a Smoke Sensor for Diesel Engines[J]. Journal of Engineering for Gas Turbines and Power,2009,131(2).

[11] Lee Sung Hyun, Nam Tae Woon. Fabrications and Characteristics of Infrared Sensor for Passenger Conditional Detection in Vehicle[J]. Journal of the Korean Institute of Electrical and Electronic Material Engineers, 2009, 22(3).

[12] K.M Yanev, A.I Litchev. Instrumentation system for improvement of temperature sensor performance[J]. Botswana Journal of Technology,2008,17(1).

[13] Ouyang, Liang-Biao, Belanger, David L. Flow Profiling by Distributed Temperature Sensor (DTS) System - Expectation and Reality[J]. SPE Production & Operations, 2006,21(02).

[14] Arsen Z. Adamyan, Zaven N. Adamian, Vladimir M. Aroutiounian. Smoke sensor with overcoming of humidity cross-sensitivity[J]. Sensors & Actuators: B. Chemical,2003,93(1).