International Core Journal of Engineering Volume 7 Issue 3, 2021
ISSN: 2414-1895 DOI: 10.6919/ICJE.202103_7(3).0025

Complementary Filter for UAV Control under Complex Flight

Changyi Lu[1,a], Junjie Guo[2,b]

[1]Shenyang University of Technology, Liaoning, China;

[2]Henan University, Henan, China.

[a]199154555@qq.com; [b]swlee143@gmail.com

Abstract

This paper discusses the problem of empolying a non-linear complementary filter for state estimation of unmanned aerial vehicle (UAV) given only measurements from a low-cost inertial measurement unit. A nonlinear complementary filter is proposed that fuses accelerometer output for low frequency attitude estimation with integrated gyrometer output for high frequency estimation. The raw accelerometer output includes a element for the airframe acceleration, that occurs primarily as the aircraft turns, as well as the gravitational acceleration that is necessary for the filter. The airframe acceleration is estimated using a simple centripetal force model (based on additional airspeed measurements), augmented by a first order dynamic model for angle-of-attack, and used to obtain estimates of the gravitational direction independent of the airplane maneuvers. Experimental results are provided on a real-world dataset and the performance of the filter is evaluated against the output from a full GPS/INS that was available for the dataset.

Keywords

UAV Control; Attitude Estimation; IMU.

1. Introduction

Attitude estimation is an essential task for an Unmanned Aerial Vehicle (UAV). With the growing range of applications in UAV's, and the push to make vehicles cheaper and more reliable, it is of interest to develop robust and simple algorithms for attitude estimation [1], [9]. There is a large literature on attitude filtering techniques, see for example the recent review article by Crassidis et al. [6]. Most of the advanced filter techniques (particle filtering, etc.) are computationally demanding and unsuitable for the small scale embedded processors in UAV avionic systems. The two methods that are commonly used are extended Kalman filtering (EKF) or some form of constant gain state observer, often termed a complimentary filter due to its frequency filtering properties for linear systems [12]. Extended Kalman Filtering has been studied for a range of aerospace applications [7], [9], [6], [16]. Such filters, however, have proved difficult to apply robustly [14], [4], [16]. In practice, many applications use simple linear single-input single-output complementary filters [16], [5]. In recent work, a number of authors have developed nonlinear analogous of single-input single-output (SISO) filters for attitude estimation [15], [19], [18], [13], [11], [2]. To implement these schemes on a UAV using inertial measurement unit (IMU) data the accelerometer output is used to estimate the gravitational direction. The recent work by the authors [8], [12] allows the full estimation of vehicle attitude (up to a constant heading error) as well as gyro biases based just on the accelerometer and gyrometer data. The filter fails, however, when the vehicle dynamics are sufficiently large that accelerometer output no longer provides a good estimate of the gravitational direction. This is particularly the case for a fixed wing UAV maneuvering in a limited space and making repeated rapid turns.

ISSN: 2414-1895 DOI: 10.6919/ICJE.202103_7(3).0025

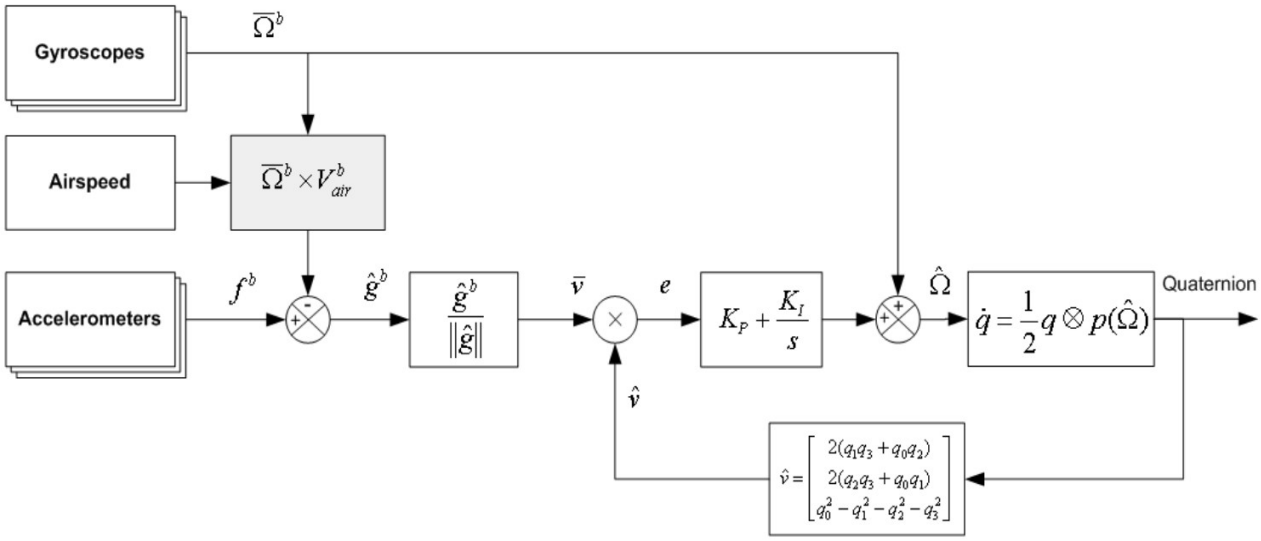

Figure 1. Complementary Filter with acceleration compensation using airspeed data.

A complementary filter for attitude estimation performs low-pass filtering on a low-frequency attitude estimate, obtained from accelerometer data, and high-pass filtering on a biased high-frequency attitude estimate, obtained by direct integration of gyrometer output, and fuses these estimates together to obtain an all-pass estimate of attitude. When the pitch and roll of a airplane are modelled as decoupled processes, a SISO filter can designed for each signal that uses the the angle between the accelerometer output and the body-fixed-frame as attitude reference and the separate gyrometer axis output as velocity reference in a classical linear complementary filter [3]. When a low pass estimate of the full attitude can be reconstructed from the IMU measurements, for example if magnetometer data is also available and the full coupled rotation matrix for attitude can be computed as an algebraic function of the gravitational and magnetic fields measured in the body-fixed-frame, then nonlinear extensions of the complementary filters have been available for fifteen years [15], [18]. Magnetometers are rarely useful on small scale UAVs due to the perturbation of the magnetic field resulting from electric propulsion systems and other disturbances. The recent work by the authors [8], [12] provided a formulation of explicit complementary filtering (ECF), posed directly on the set of rotation matrices, that is driven by a single inertial direction measurement, such as provided by the accelerometer output, along with the gyroscope output. The implementation of the explicit complementary filter is shown in Figure 1.

2. Methodology

An IMU is the abbreviation for Inertial Measurement Unit. It generally comes packaged in two flavors: 6-DoF and 9-DoF, i.e., six degrees of freedom or nine degrees of freedom. The first component of an IMU is called the Gyroscope or Gyro and it measures the angular velocity across an axis. So, you would need 3 gyros to compute angles in 3D. The best part about a gyro is that it is not affected by external forces and acceleration. Gyros work very well under dynamic conditions when rotational velocities are high, however they drift significantly with regard to time. Hence, the simplest filtering operation performed on gyro data is a high pass filter to remove low frequency drift.

The second component of an IMU is called the Accelerometer or Acc and it measures the effective acceleration along an axis. So, you would need 3 acc to compute angles in 3D given information about external forces. Acc are affected by vibration and other external forces and hence cannot be directly used for computing angles/attitude accurately. However, an acc works well in static conditions as opposed to the gyro. Hence, the simplest filtering operation performed on acc data is a low pass filter to remove dynamic noise from vibrations and other external factors.

ISSN: 2414-1895 DOI: 10.6919/ICJE.202103_7(3).0025

Also, note that the readings from an IMU are greatly affected by temperature changes. The noise changes with temperature and as the IMU is being used due to "heating up" of the sensor. A combination of 3 gyros and 3 acc (one in each of X,Y,Z axis) is called a 6-DoF IMU. A 9-DoF IMU also includes a 3-axis magnetometer which measures Earth's magnetic field which can be used to obtain orientation information as well. However, for indoor operation which has a lot of metal structures, the magnetometer is generally inaccurate as is excluded from the data fusion. The magnetometer is also often called the Digital Compass as it can be directly used to compute the North pole direction.

Let us assume that our IMU is a 6-DoF one, i.e., it has a 3 axis gyro and a 3 axis acc. A 9-DoF IMU is commonly called MARG (Magnetic, Angular Rate and Gravity) sensor. A simple mathematical model of the gyro and acc is given below. Gyroscope Model is shown as:

$$\boldsymbol{\omega} = \dot{\boldsymbol{\omega}} + \mathbf{b_o} + \mathbf{n_o}$$

Here, ω is the measured angular velocity from the gyro, $\dot{\omega}$ is the latent ideal angular velocity we wish to recover, $\mathbf{b_o}$ is the gyro bias which changes with time and other factors like temperature, $\mathbf{n_o}$ is the white gaussian gyro noise. Accelerometer model is built as:

$$\mathbf{a} = \mathbf{R}(\dot{\mathbf{a}} - \mathbf{g}) + \mathbf{b_a} + \mathbf{n_a}$$

Here, $\mathbf{a}$is the measured acceleration from the acc, $\dot{\mathbf{a}}$ is the latent ideal acceleration we wish to recover, $\mathbf{R}$ is the orientation of the sensor in the world frame, $\mathbf{g}$ is the acceleration due to gravity in the world frame, $\mathbf{b_a}$ is the acc bias which changes with time and other factors like temperature, $\mathbf{n_a}$ is the the white gaussian acc noise.

The simplest way to estimate angles/attitude/orientation of the IMU in world is by fusing data from gyros and acc using a Complementary Filter. We high pass the gyro data and low pass the acc data. Therefore, The final equation for fusing gyro and acc data into a complementary filter is given below:

$$\mathbf{Ang_{t+1}} = (\mathbf{1} - \boldsymbol{\alpha})(\mathbf{Ang_t} + \boldsymbol{\omega}_{\mathbf{t+1}}\mathbf{dt}) + \boldsymbol{\alpha}\mathbf{a_{t+1}}$$

$\boldsymbol{\alpha}$ can be chosen as $\boldsymbol{\alpha} = \frac{\boldsymbol{\tau}}{\boldsymbol{\tau}+\mathbf{dt}}$ where $\boldsymbol{\tau}$ is the desired time constant - how fast the data readings to respond and $\mathbf{dt} = \mathbf{f}^{-1}$ is the inverse of sampling frequency $\mathbf{f}$. Generally $\boldsymbol{\alpha} > \mathbf{0.5}$ is used.

3. Experiments

We implement the designed filter on a UAV in simulation environment, which is built by ROS Gazebo platform. The whole UAV flight control system is determined by PX4 firmware. We also design a circle flight motion to validate the filter during UAV motion. We use an indoor UAV flight-experiment field, which consists of a motion capture system: VICON with 8-cameras. The VICON outputs high accuracy of pose estimation for a rigid object, which is regarded as groundtruth for algorithm evaluation. In experiments, three types of flights are designed: two-point loop flight, two-triangle loop flight and fixed-point rotation flight. To evaluate performance of the proposed CF, a quadrotor is used to execute aggressive flights. During the flights, we compare currently popular sensor fusion approaches for attitude estimation: EKF (Extended Kalman Filter) and ESKF (Error State Kalman Filter) with the designed CF, in estimation of attitude Euler angles and runtime of a single algorithm epoch. Their stability of realtime estimate outputs is also considered. The quadrotor platform applies light-weight mechanism structure with limited weight and size. A Pixhawk R15 flight controller is employed to manage sensor driven and fusion, attitude and position control, and communication with onboard PC. The PC, installed with Linux operating system including ROS, which is responsible for receiving pose measurements from VICON, and processing flight planning commands.

Volume 7 Issue 3, 2021
DOI: 10.6919/ICJE.202103_7(3).0025

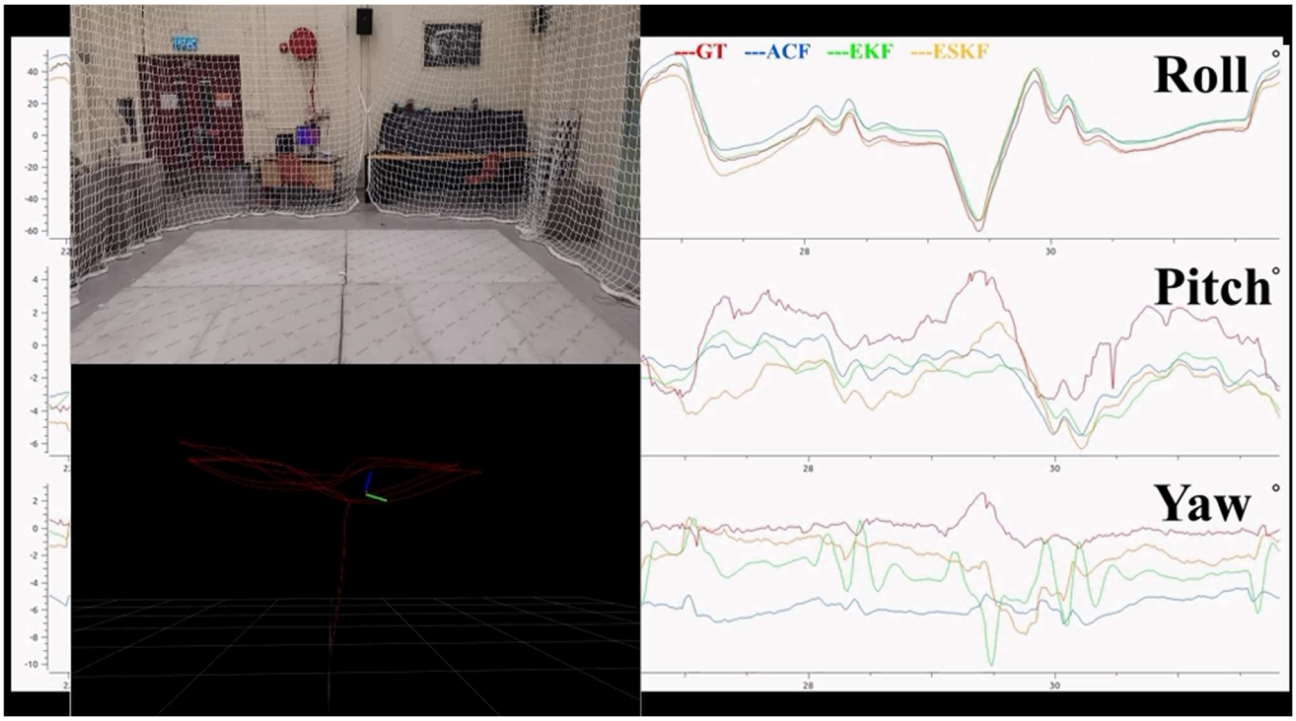

(a)

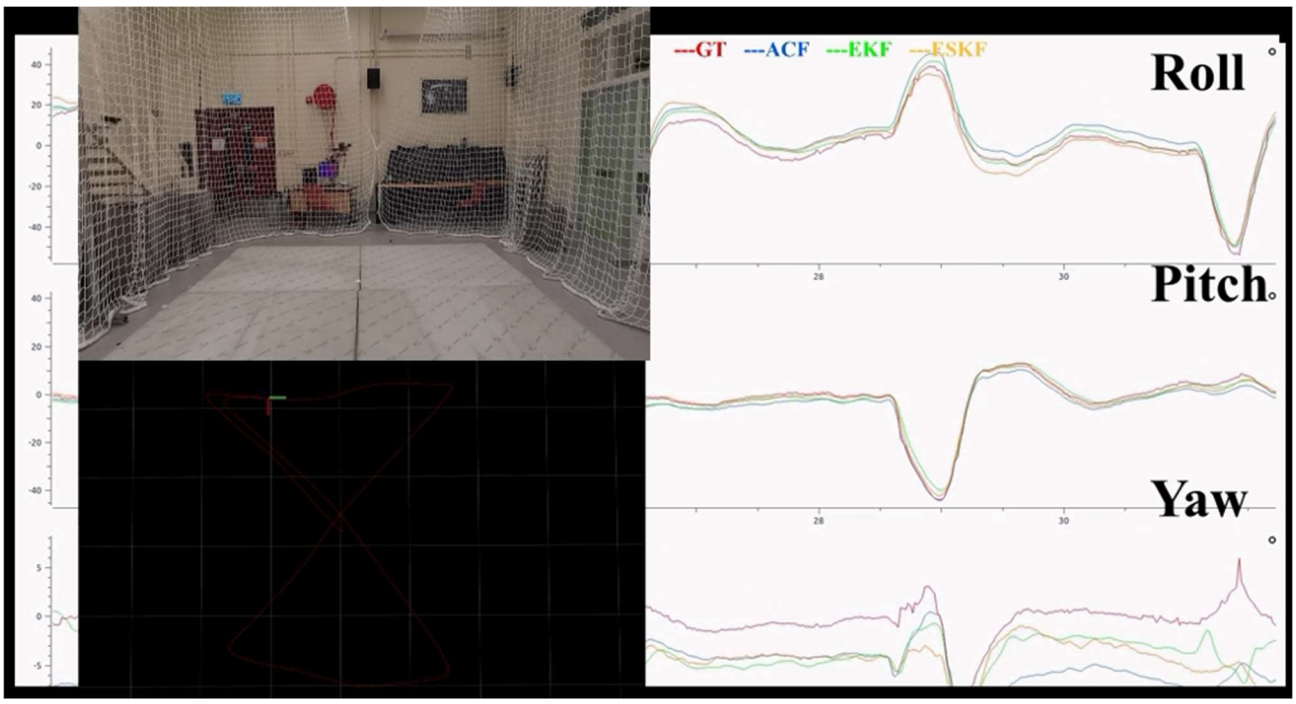

(b)

Figure 2. Acutal experiments.

4. Conclusion

The designed Complementary Filter (CF) was extended to incorporate a model of the longitudinal angle-of-attack dynamics of a fixed-wing aircraft. With this model, the CF, using only IMU and dynamics pressure measurements achieved attitude filtering performance of the same quality as a full extended Kalman filter that exploited full GPS/INS data. The ECF shows significant potential as a simple and robust attitude filter for small scale UAV vehicles.

ISSN: 2414-1895 DOI: 10.6919/ICJE.202103_7(3).0025

References

[1] A-J. Baerveldt and R. Klang. A low-cost and low-weight attitude estimation system for an autonomous helicopter. Intelligent Engineering Systems, 1997.

[2] S. Bonnabel, P. Martin, and P. Rouchon. A non-linear symmetry-preserving observer for velocity-aided inertial navigation. In American Control Conference, Proceedings of the, pages 2910–2914, June 2006.

[3] G. Buskey, J. Roberts, P. Corke, P. Ridley, and G. Wyeth. Sensing and control for a small-size helicopter. In Experimental Robotics VIII: Springer Tracts in Advanced Robotics, volume 5. Springer, February 2004.

[4] D. Choukroun, I.Y. Bar-Itzhack, and Y. Oshman. Novel quaternion kalman filter. IEEE Transactions on Aerospace and Electronic Systems, 42(1):174–190, January 2006.

[5] D. Gebre-Egziabher, R.C. Hayward, and J.D. Powell. Design of multi-sensor attitude determination systems. IEEE Transactions on Aerospace and Electronic Systems, 40(2):627–649, April 2004.

[6] T. Hamel and R. Mahony. Attitude estimation on SO(3) based on direct inertial measurements. In Robotics and Automation, 2006. ICRA 2006. Proceedings 2006 IEEE International Conference on, pages 2170–2175, Orlando Fl., USA, April 2006. Institue of Electrical and Electronic Engineers.

[7] R. Mahony, T. Hamel, and Jean-Michel Pflimlin. Complementary filter design on the special orthogonal group SO(3). In Proceedings of the IEEE Conference on Decision and Control, CDC05, Seville, Spain, December 2005. Institue of Electrical and Electronic Engineers.

[8] B.L. Stevens and F.L. Lewis. Aircraft Control and Simulation. John Wiley and Sons, second edition, 2003. ISBN 0471371459.

[9] R. Mahony, T. Hamel, and J.-M. Pflimlin, "Nonlinear complementary filters on the special orthogonal group," IEEE Transactions on automatic control, vol. 53, no. 5, pp. 1203–1218, 2008.

[10] H. G. De Marina, F. J. Pereda, J. M. Giron-Sierra, and F. Espinosa, "Uav attitude estimation using unscented kalman filter and triad," IEEE Transactions on Industrial Electronics, vol. 59, no. 11, pp. 4465–4474, 2011.

[11] S. Guo, J. Wu, Z. Wang, and J. Qian, "Novel marg-sensor orientation estimation algorithm using fast kalman filter," Journal of Sensors, vol. 2017, 2017.

[12] M. Xu, N. Fan, and Z. Wang, "Study on extended kalman filtering for attitude estimation of micro flight vehicle," in 2011 Third International Conference on Measuring Technology and Mechatronics Automation, vol. 3. IEEE, 2011, pp. 457–460.

[13] J. Sola, "Quaternion kinematics for the error-state kalman filter," arXiv preprint arXiv:1711.02508, 2017.

[14] N. B. da Silva, D. B. Wilson, and K. R. Branco, "Performance evaluation of the extended kalman filter and unscented kalman filter," in 2015 International Conference on Unmanned Aircraft Systems (ICUAS). IEEE, 2015, pp. 733–741.

[15] V. Madyastha, V. Ravindra, S. Mallikarjunan, and A. Goyal, "Extended kalman filter vs. error state kalman filter for aircraft attitude estimation," in AIAA Guidance, Navigation, and Control Conference, 2011, p. 6615.

[16] M. Quigley, K. Conley, B. Gerkey, J. Faust, T. Foote, J. Leibs, R. Wheeler, and A. Y. Ng, "Ros: an open-source robot operating system," in ICRA workshop on open source software, vol. 3, no. 3.2. Kobe, Japan, 2009, p. 5.