International Core Journal of Engineering Volume 7 Issue 2, 2021
ISSN: 2414-1895 DOI: 10.6919/ICJE.202102_7(2).0032

Design of Running Life Accumulator based on the Aero Engine

Hong He[1,a], Zuo Zhao[2,b]

[1]School of electrical engineering, Xi 'an Aeronautical University, Shaanxi 710077, China;

[2]School of computing, Northwest Polytechnical University, Shaanxi 710072, China.

[a]312492559@qq.com, [b]1352128423@qq.com

Abstract

In order to raise the work efficiency more quickly, to record and store the data of aircraft engine running time more conveniently, using microcomputer minimum system on MCU to design a manual start, automatic count and program calculate of accumulator. The design of accumulator is for field record aircraft engine start-stop time, running time, overhaul cycle, etc. To ensure that the service life of the aircraft engine in the safe run. The practice proved that this accumulator solve the question of the inconvenient of man-made record, the difficulty to store data and can store wrong data easily, ensure the validity of the recorded data, increasing the storage space and make the record to the operation of the aircraft engine life way of improvement.

Keywords

Aircraft Engine; Service Life; Data Recording; Panel Display.

1. Introduction

Aero engine safety is the primary guarantee for aircraft flight. When an aero engine reaches its prescribed flight time or the number of takeoff and landing flights allowed by the engine, the working hours of the engine can be strictly recorded by referring to the record table of flight times of the aero engine, and an alarm can be issued before the flight limit is reached to ensure safe flight. Data show that the flight time, landing times and other data records of aircraft engines are mostly manually recorded by airport ground staff, so there will be many problems such as inaccurate recording time, time calculation error, and difficulty in storing the recorded results. Therefore, this paper designs an aero-engine operating life accumulator which can replace manual paper record of engine starting, taking off, landing and stopping time, and can realize the calculation of parameters such as ground time, air time, overhaul time, etc[1].

2. The Whole Systems Design

In order to ensure the system can work at the normal operation, portable and stable and reliable operation, the whole system design is composed of resistive touch pad, TFT-LCD serial port screen[5], Microprocessor, charge and discharge circuit, EEPROM, lithium battery, etc. The system is as shown in Figure 1.

Battery power using lithium ion battery for power supply and charging circuit can be charging of lithium battery, and then use the Boost circuit to boost voltage to reach the power supply to the system, data processing part of the system using microprocessor and TFT - LCD screen for communication serial port industry, in order to achieve the function of data display and control, microprocessor to realize real time record and store data and to calculate and display, and record and display the data in the serial interface screen configuration. The Visual TFT upper computer software is used to draw the startup interface and the demand table interface.

ISSN: 2414-1895 DOI: 10.6919/ICJE.202102_7(2).0032

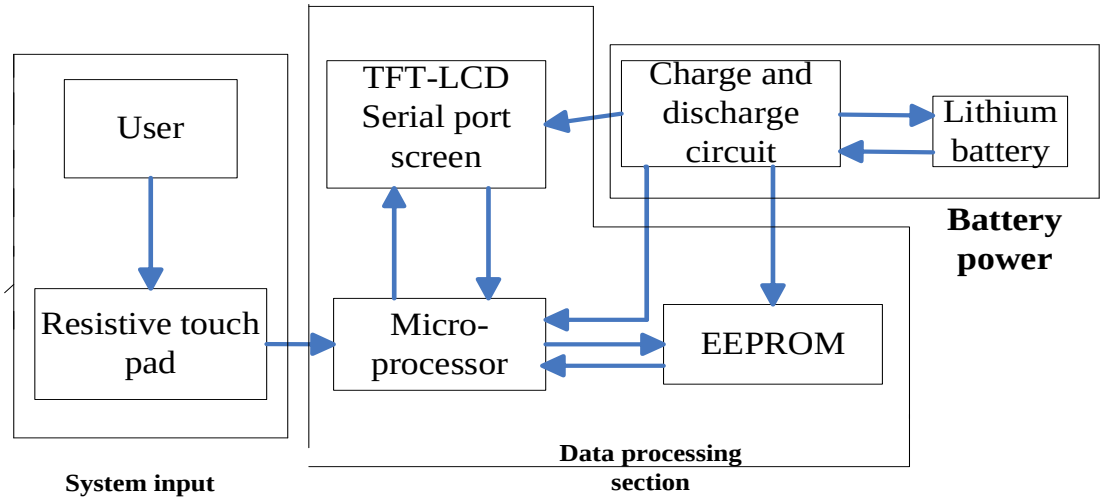

Figure 1. System structure block diagram

3. The design of system hardware

3.1 Display device

The display device of aero-engine running life accumulator adopts configuration industry serial port screen. It is a serial port display terminal that combines TFT display drive, picture font storage, Graphical User Interface (GUI) User Interface operation, real-time Clock (RTC) display and various configuration controls into one. Users can easily display text, pictures and curves by sending corresponding serial instructions to the micro-processor. There is an instruction cache of 4.7K bytes in the serial port screen, and the user's host operation can achieve the result of no waiting and exit serial program after sending several instructions continuously.

The selected industrial serial interface screen is used as the display terminal of the accumulator, which makes the whole process of operating the screen convenient and simple, and greatly reduces the workload of the coding program. After the project is downloaded to the screen, once a button of the screen is pressed, the user Microprogrammed Control Unit (MCU) serial port will receive the button ID information or coordinate value uploaded from the screen. The internal system of serial port screen analysis the ID number, so that the user can obtain the screen position and functional properties of the current button, and then control the action of relevant peripheral devices or the updated display of the screen[2]. This method is convenient for updating program each time.

3.2 Power supply circuit

In this paper, the engine operating life accumulator is designed. After the display device is selected, the most important part of the hardware is the power supply circuit. The accumulator is powered by lithium ion rechargeable battery. The biggest advantage of this power supply method is that the designed accumulator can be as convenient and practical as a smart phone or a tablet computer. Even the ordinary smart phone can be used to complete the charging of the accumulator.

The battery thickness selected in this design is only 3mm, effectively reducing the overall thickness. After the battery is selected, the power supply circuit is tested to make it meet the system power supply requirements[3]. Next, test the battery power detection circuit, connect the battery output end to the load, and then use a multimeter to measure the voltage at both ends of the battery. At the same time, observe whether the battery indicator is correct. After the battery power detection and discharge circuit testing, the charging circuit should be tested. The charging interface of the circuit is a mini USB interface, which can be charged by using an ordinary mobile phone charger. When charging, the battery power indicator will flash to prompt the current charging status, and if it is always on, it means that the battery has been fully charged.

ISSN: 2414-1895 DOI: 10.6919/ICJE.202102_7(2).0032

3.3 Control circuit on MCU

As an important part of the accumulator recording data, the storage circuit is as important a part of the control system as the control circuit of the single chip microcomputer, and also a key part of the design and manufacture of the accumulator of the aero-engine operating life.The storage circuit USES THE IIC bus to support the serial data bus and the serial clock bus, and its connection with the TFT-LCD display can be used as both receiver storage and external receiving device when used as master and slave.

As an important part of the control system, the minimum system with the least components is used to control the accumulator time calculation and data acquisition, including crystal oscillator circuit, reset circuit and single chip. Microcontroller minimum system circuit diagram is seen in Figure 2.

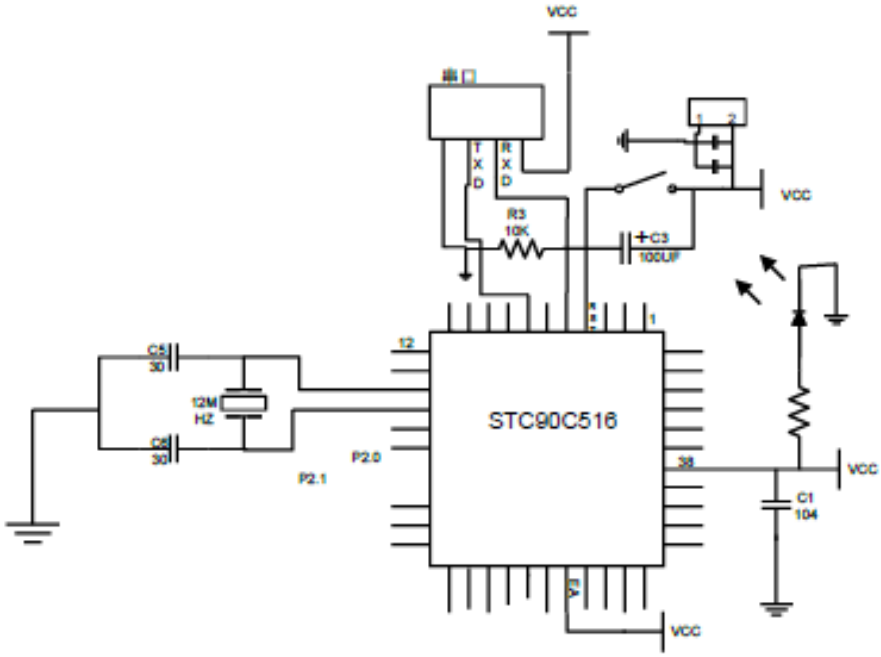

Figure 2. Circuit diagram of MCU's minimum system

In this paper, the engine operating life accumulator is designed. After the display device is selected, the most important part of the hardware is the power supply circuit. The accumulator is powered by lithium ion rechargeable battery. The biggest advantage of this power supply method is that the designed accumulator can be as convenient and practical as a smart phone or a tablet computer. Even the ordinary smart phone can be used to complete the charging of the accumulator.

If 3.3V TTL/COMS serial level communication is required, the user can directly skip the MAX232 level conversion chip and set the screen to TTL mode (default 232 state).In addition, the device can tolerate 5V input in 3.3V TTL/CMOS mode.

4. System software design

To download the program, the system power button must be turned off first, then disconnect the power supply between the single chip and the screen, and then connect the USB to TTL serial port for program download. After downloading, you need to unplug the serial port, and then connect the power cord between the MCU and the screen, then you can start the test. In order to verify the correctness of the recorded data of the system, manual recording is needed to verify the correctness of the recorded data. To test the stability of the system, a large number of tests are carried out to ensure the accuracy of the data recorded each time. Figure 3 is the flow chart of the whole program.

The accumulator of aero engine operating life adopts industrial configuration serial port screen. After the serial port screen is connected with the Visual TFT and the computer successfully, buttons,

ISSN: 2414-1895 DOI: 10.6919/ICJE.202102_7(2).0032

progress bar, dialog box and other contents in the required screen can be set[5]. After the simulation run in the software, binary file burning is supported, installation package is generated and the whole project is loaded into the serial port screen through SD, then the production and change of the screen display interface can be realized. In the recording process of engine starting and stopping, an engine is recorded as a takeoff and landing from starting to stopping, and all the operating time of an engine before reaching its service life is called the total accumulated time. The cumulative time recorded by the accumulator will automatically alarm as soon as it approaches the service life of the engine to prevent safety hazards caused by careless recording.

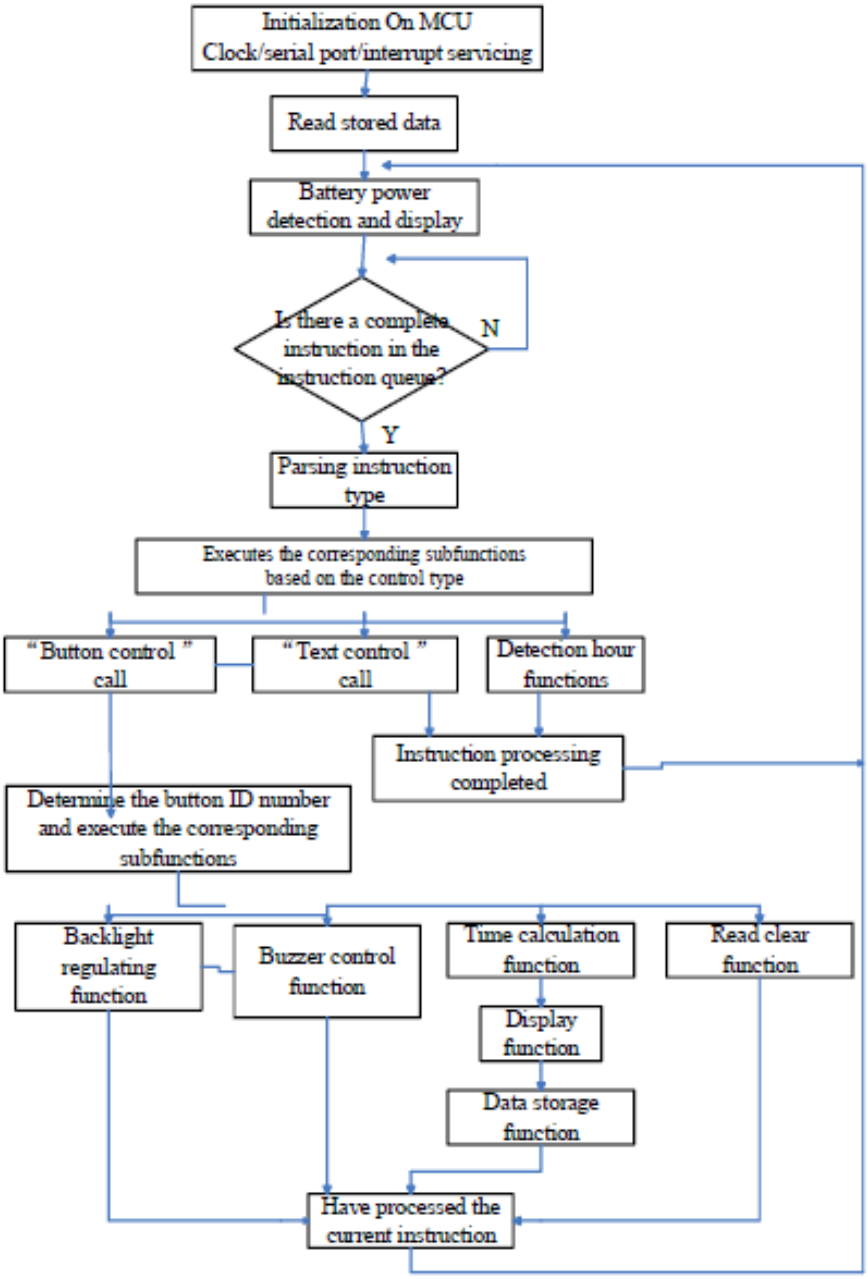

Figure 3. Overall program flow diagram

5. Debugging and Assembly

After the functional test of software and hardware, the system can be assembled after normal operation. Consider the sequence and position of each circuit installation when assembling. The

ISSN: 2414-1895 DOI: 10.6919/ICJE.202102_7(2).0032

power switch is located in the most inside of the shell, and then the screen is fixed in the card slot, and screws are used to fix it. Finally, the control board, lithium battery and battery charging and discharging circuit board are fixed in the corresponding position on the back of the screen. Then use enameled wire to connect the corresponding pins. During connection, each line is labeled to indicate the function of this line, so as to facilitate inspection and prevent misconnection. After the connection is completed, the power test, after the test is normal, the back cover can be stuck dead, and then the software can be debugged. The assembly wiring diagram is shown in Figure 4.

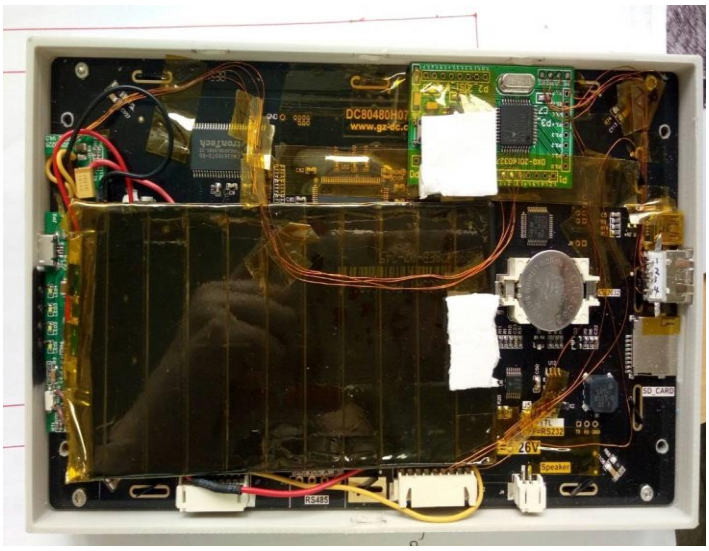

Figure 4. System assembly wiring diagram

In order to verify the correctness of the recorded data of the system, manual recording is needed to verify the correctness of the recorded data. To test the stability of the system, a large number of tests are carried out to ensure the accuracy of the data recorded each time.

6. Conclusion

Practice has proved that the design of aircraft engine running life accumulator solve the inconvenience of the traditional artificial record data. The uneasy storage of record data, the error prone, and many other issues, raised the work efficiency of maintainer, can be more convenient to record and store data, and ensure the validity of the recorded data, increases the storage space and improve the way of the aircraft engine running life record.

References

[1] Xinfa Li, Hong Yang, Guohui Zhang:Methods for determining and controlling service life of aircraft engines in service Journal of Measurement and Control Technology, vol. 9 (2012), p. 128-130.

[2] Junsheng Yu. Display device Technology [Z]. Beijing. National Defense Industry Press. August 2014.

[3] Wei Wang,Application of CFM56-7B Engine RD data in engine life trend analysis Journal of Aviation Maintenance & Engineering, vol. 9 (2017), p. 47-48,

[4] Yan Zhang, Cunsong Wang, Remaining useful life prediction for aero-engine based on the similarity of degradation characteristics Journal of Systems Engineering and Electronics, vol. 3 (2019), p. 1414-1421.

[5] Guangzhou DA-Iot industrial Serial Port Screen Data Manual V0.99. (In Chinese)

[6] Liming Niu. Design of online charging and discharging management circuit of Lithium battery Journal of Electronic Technology Application, vol.4 (2002), p. 11-13.