ISSN: 2414-1895 DOI: 10.6919/ICJE.202112_7(12).0073

Design of Monitoring System for Engine Assembly Line

Penghui Wu

School of Logistics Engineering, Shanghai Maritime University, Shanghai, 201306, China.

wph461960226@outlook.com

Abstract

This system uses the information data collection platform under the B/S framework, and uses OPC interface technology to upload all kinds of data on the production line, such as production beats, material information and personnel information, through the Siemens KEPServerEX server, and then further store it to In the database, it can be called at any time when the system is in use. The design of the system mainly solves the difficulty of the current production line monitoring function is single and cannot be accessed remotely. The main functions covered include equipment library data storage, real-time production monitoring, production chart analysis and abnormal alarm prompts. The construction and operation are relatively stable, and the functional modules can be used normally.

Keywords

B/S mode; Data acquisition; Communication interface; Data storage; Surveillance system.

1. Introduction

With the rapid development of my country's economy, correspondingly, huge changes have taken place in the manufacturing sector. The previous order-based production method has been a bit unable to keep up with the development needs of the times, and the introduction of Industry 4.0 has made the production method more intelligent. Change the direction to realize the transformation and upgrading of the manufacturing industry.

The most important and basic part of intelligent production is the production line. Generally, the production line is mainly composed of various processing and manufacturing hardware equipment, data acquisition, sensors, and management software. In the production line of intelligent manufacturing, industrial Ethernet is used to connect the PLC and other control equipment on the industrial equipment with the server, and the information generated by the PLC and sensors is collected and uploaded to the server through OPC technology, and the administrator or field staff You can view the running status of the production line, fault information, and production beats in real time through the monitoring system. At the same time, the server of the monitoring system can optimize the structure of the production line and improve the production plan based on these data.

In the industry 4.0 era, the manufacturing execution system (MES) mainly has three levels: equipment process control level, manufacturing execution level for production workshops and enterprise level for management. MES can transfer information between the upper and lower levels, upload the production information collected from the industrial manufacturing site to the management level, and can process and issue orders such as order information and production tasks from the management level to the production site. At the same time, MES The system can also carry out real-time detection of production line operation site information, timely discover possible fault information and give early warning, and upload it to the management level at the same time, waiting for the management level to deal with it.

ISSN: 2414-1895 DOI: 10.6919/ICJE.202112_7(12).0073

At present, my country is in the process of transforming from a large manufacturing country to a strong manufacturing country. This has created a huge MES system market, which has attracted a large number of MES companies' investment and development. At the same time, the vigorous development of MES systems has also made some The research and development conducted by scientific research institutions are mainly focused on the traceability of discrete processing and manufacturing and collected data, which has injected strong vitality into the development of the MES system.

2. System construction and overview

2.1 Overall design

The relationship between the three levels of the MES system is shown in the figure1. The MES system transmits information on the assembly line site personnel, equipment operation, materials, procedures and other information to the management server in real time and stores it, and various production instructions on the server side Released to the production site.

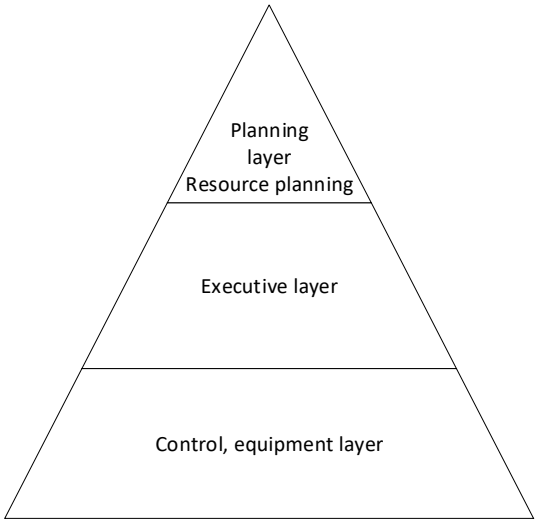

Fig. 1 MES system structure

The MES system is configured with multiple servers, which are divided into two groups: data collection cache server and data operation server. Among them, the data collection server is mainly connected to the PLC industrial control equipment on the on-site assembly line and various sensors through OPC technology. It can collect the production information generated by the industrial control equipment and sensors in real time, and the main function of the data operation server is to collect the data. Various types of production information are stored and operations including addition, deletion, modification, and checking, as well as configuration information of some electronic hardware devices such as sensors.

At present, MES system mainly has two architecture modes, one is the B/S architecture based on browser and server, and the other is C/S[1] architecture based on client and server. Comprehensive comparison of B/S and C/S The advantages and disadvantages of the architecture, this article adopts the B/S model for system development and research.

The B/S architecture adopted by this system is mainly divided into a three-tier architecture of client (presentation layer), application server (business logic layer), and database server (data storage layer). The NHibernate object mapping relational framework based on .NET is used as the object[5].The data storage layer development tool for relational database mapping can greatly save SQL Server and ADO.NET use time, thereby improving the overall efficiency of the system, and the business logic layer mainly uses ADO.NET mode C# programming to achieve data exchange. And the Web server performs a unified processing on the data query operation and converts it into SQL language and then sends a request to the database. In the presentation layer, the ASP.NET framework technology is used for development. The powerful function of ASP.NET can separate the design of web page logic and

ISSN: 2414-1895 DOI: 10.6919/ICJE.202112_7(12).0073

business logic, making the written code more efficient and tidy. In the data storage design of the MES system, SQL Server 2012 database management tools are used to develop and design, integrate and manage data from different categories, add different constraints and foreign keys, so that the data can be effectively protected, and information islands can be connected.

2.2 Main functional modules of the system

The functional modules designed in this MES system are mainly divided into data storage module, real-time monitoring module, icon analysis module, and alarm and early warning module:

Data storage. The data of each station corresponds to a data type model, and the data models of each station are independent of each other. Through the various data collected by OPC technology, the object information generated by the data type of each station is uploaded to the client and filtered .Then store it in SQL Server database.

Real time monitoring. The function of this module is mainly in the display window of the Web page, which can display the overall operating information of the assembly line, and use different colors to mark the operating status of a single device, including normal and fault information, and can be synchronized with the assembly line job site in real time to achieve window display Consistency with field data.

Chart analysis and production plan. The system integrates and analyzes the collected information with the data in the set period, completes simple data comparison and statistics, and sets a reference for further production planning arrangements at the management level.

Alert reminder. The PLC and sensor of each station may generate some alarm information. Before that, we can preset some faults or alarm scenarios in the system. When there is an alarm information, it can be compared with the preset alarm. Displayed in the alert module.

3. Key technology

3.1 Data acquisition technology based on OPC technology

The emergence of OPC technology is mainly to solve the problem of data communication between different hardware devices in industrial control. It establishes a unified standard interface for application communication of different devices, which makes data access between different devices establish a unified standard and Standards, separation of equipment and equipment application programs, making it a unified interface technology for data exchange between equipment of irrelevant equipment suppliers, which solves the problem of reading and writing of industrial process control and equipment information data in the past.

The interface of OPC technology is generally divided into two kinds of customized interface and automation interface. The customized interface is mainly C++ computer programming language, which is more flexible. Some upper computer software on the market can use the internal OPC server to directly communicate with the PLC equipment on the production site, but it is more expensive in terms of price. The automation interface mainly uses C#, Java, Object-oriented computer programming languages such as Visual Basic mainly serve client software with automation objects. By comparison, this system mainly adopts object-oriented programming ideas, and under economic considerations, it is more appropriate to use automation interfaces.

In terms of data access methods, OPC mainly has three access methods: synchronous, asynchronous and subscription.[14] Synchronous access is carried out in serial order, which may cause blockage in data transmission, so it is suitable for cases where the data is small. Asynchronous data access is mainly handed over to the server side. During this period, the system can process other transactions. After the server program has finished running, the result is returned to the system. The subscription type is mainly to check the data regularly, and the client will be notified when it exceeds a certain range. The biggest disadvantage is that the data cannot be written. This MES system needs to collect and display data on the production site, and also need to issue management-level instructions to the

ISSN: 2414-1895 DOI: 10.6919/ICJE.202112_7(12).0073

production site. At the same time, the amount of data on the job site is relatively large, so asynchronous data access is selected.

The MES system of the engine assembly line uses the Siemens OPC protocol for data collection, creating an OPC Group, connecting the OPC client written in C# to the OPC server through an automation interface, and then adding the field devices that need data collection to the OPC Item, Siemens' The OPC protocol establishes a connection between the on-site PLC data of the industrial control system and the manufacturing execution system, stores the collected PLC data in the database according to the specified database address, and then the server sends the data in the database to the remote access site in real time. In the system, the data is mapped into real-time running actions. At the same time, the MES will issue instructions to the PLC corresponding to the station based on the displayed monitoring information, and then the PLC will obtain it through the database and execute the corresponding actions. Through this process, real-time acquisition, storage and control of PLC data by the MES system are realized.

3.2 Data transmission and protocol

In terms of data protocols, there are currently three main types of TCP/IP, HTTP, and WebSocket.

The TCP/IP protocol is mainly used to realize the communication and transmission of data between different networks. It is an abbreviation, application layer (Telnet, FTP, Email, etc.), transport layer (TCP, UDP), network layer (IP, ICMP, IGMP, etc.) and link layer (device driver), named after its core TCP and IP protocols, which also include FTP, SMTP, TCP, UDP, IP and other protocols. The TCP/IP protocol is used in the Internet It belongs to the basic communication architecture. The protocol provides a point-to-point connection mechanism and mode, standardizes data encapsulation, addressing, transmission and routing, and reception, and uses this standardized mode to connect and transmit data.[4] Use the TCP/IP protocol for data transmission, mainly through incoming communication, which requires the two key network physical quantities of IP address and port number. In the network, the IP address on the same server is generally the same, but the port number of each application on the server is not the same. The communication process of the Socket is mainly to initialize the advanced nature of the server, create a monitoring Socket, and then bind to each application port on the server, wait for the connection signal of the client, and then create the communication after the monitoring Socket receives the signal from the client. Socket, while monitoring the Socket to notify the server of the corresponding port number [15], the port number and the communication Socket connection are successfully connected to the client, the client sends a data request[11], the server receives and processes it, and the client reads the connection, the connection is closed. In its transport layer, it is divided into two protocols, TCP and UDP. The TCP protocol requires three steps to establish a channel. The client initiates a request, the server receives the request and informs the client, and the client feeds it back to the server. Its main feature is security and stability, but low efficiency. When the UDP protocol is establishing a channel, no matter whether the server is busy or not, it will directly send data to the server. Its main characteristics are fast communication speed and high efficiency, but it is unstable and may easily cause data loss.

The HTTP protocol is an application layer transmission protocol based on the TCP/IP protocol. It is also used to transmit data through TCP. It is used to transmit the hypertext on the WWW server to the local browser. It can make the browser more efficient and reduce network transmission. . The protocol can only establish communication to transmit data after the client initiates a request and the server receives the request from the client. In other words, the establishment of a communication channel can only be initiated by the client actively, and the server transfers the data required by the client The data is sent to the client, but the server cannot actively transmit the data to the client, which restricts the HTTP protocol to a large extent. The HTTP communication process is: first, the client clicks on the link to initiate a connection request, establishes a connection with the server, and then the client initiates data request information, which mainly includes URL protocol, HTTP version, Request Header and request body, and then the server According to the request, the corresponding

ISSN: 2414-1895 DOI: 10.6919/ICJE.202112_7(12).0073

data is fed back, and finally the client receives it, decodes the information and displays it on the web page.

The WebSocket protocol, like the HTTP protocol, is also based on TCP communication. However, compared to HTTP, WebSocket breaks the limitation that the HTTP protocol can only be initiated by the client[17]. It is a two-way communication protocol, WebSocket and client/web pages can actively initiate requests to transmit data to the other party.[19] Similarly, the establishment of its communication channel also needs to be the same as TCP/IP. After a three-way handshake, the connection is successfully connected for data transmission. However, unlike TCP, the creation of the WebSocket communication channel is connected to the client in the HTTP protocol used. After the channel is created, continuous data transmission can be carried out without the need to re-create the communication channel for each request like TCP and HTTP. This saves network resources and bandwidth. WebSocket-based This kind of advantage, this system chooses WebSocket to carry on the data transmission.

3.3 B/S-based remote access development

The system adopts the ASP.NET development framework, which is a web development platform. It mainly has functions such as web page processing, extension, HTTP program and communication processing. It can separate the logic layer (front-end) and business layer (back-end) of web pages. The logic of the front-end and back-end code writing is clear and tidy, and the front-end and back-end developers focus on their respective development work.

Front-end development mainly adopts HTML (Hypertext Markup Language) and CSS (Cascading Style Sheets) for development. It divides and displays the various flat modules of the web page. The syntax is simple, the logical structure is clear and clear, and it is more flexible and convenient when changes are needed, which also makes the development Staff can focus on the development of the Web front-end.

The back-end development of the system mainly adopts ASP.NET and MVC framework, where MVC is the model (Model), view (View), controller structure (Controller) [7], analyze the object model proposed by the system, and then write the object model as C# Class, create a specific object, and then write the ADO interface, and then combine with NHibernate to make the specific object of the C# class in .NET successfully connect with the database in SQL Server 2012, and realize the data access and data access between the object model and the Database Functions such as reading and writing.

3.4 Database design and management

This MES system uses Microsoft's relational database SQL Server 2012 database management software, built-in SQL language defined by the International Standards Organization, SQL statements are simple and easy to understand, and it is easy for open personnel to perform basic operations such as additions, deletions, corrections, etc. At the same time, SQL Server integration It provides a variety of interfaces to support various programming languages. For example, .NET can use ADO to connect to access SQL Server; Java or JavaServer Pages can use JDBC to connect to SQL Server, etc., with fast calculation speed, low cost, and use Convenient and flexible.

In the design and management of the data table in the database, it is mainly considered from the aspects of equipment, procedures, and workstations. For example, the engine cylinder head assembly line has main processes such as finishing milling, finishing, air-tight and pressing, and there are many work stations under these processes, so this naturally produces a foreign key relationship (the process table is used as the work station In the work station table, it mainly includes the attribute fields such as running, blocking, waiting, alarm, etc. Pay attention to the setting of the identification column and the primary key, which can be used to ensure the rationality and completeness of the field or attribute The above attributes should pay attention to the type of the attribute value, set to the bit type value, that is, 0 or 1. At the same time, also pay attention to when the inserted attribute value is a null value, generally use the SQL statement: insert into data Table (field name) values(null) is used to set a null

ISSN: 2414-1895 DOI: 10.6919/ICJE.202112_7(12).0073

value; for common queries, we can make it into a transaction, which is similar to a function in a programming language, and provides an interface for processing some complex and commonly used calculation processes. In SQL Server, you can create a new view in the database, you can choose to add the created data table, so that the display will be more complete, and the relationship and structure between the table and the table are also relatively clear, it is worth noting that the view It can be regarded as a special virtual table whose data comes from the result set of other tables, not the real data table that exists in the database. Similarly, if you use SQL statements to add, delete, modify, and check, it will not affect To the original structure and data of the original data table. Figure 2 is the device database management interface

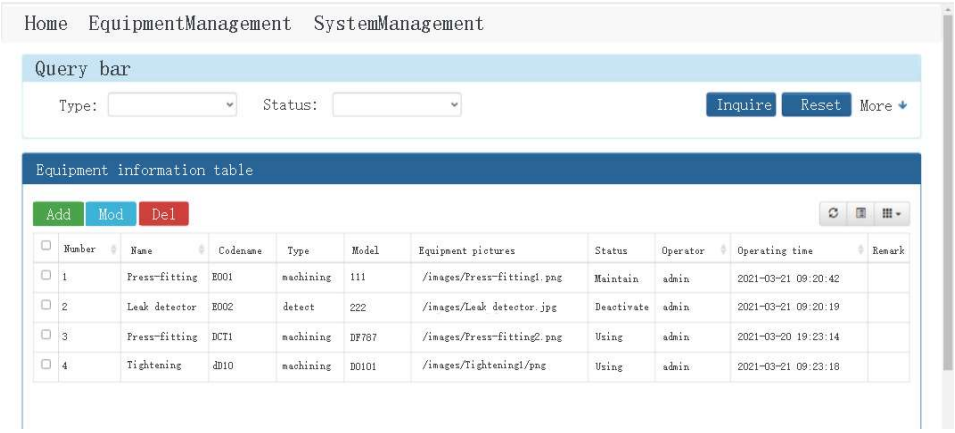

Fig. 2 Device database management interface

4. Functional module

4.1 Data storage

This system adopts the B/S model design method based on Websocket, the client and server can initiate communication at the same time, and the established channel can continuously communicate between the two, and these transmitted data come from well-designed In the database. The various PLC systems at the production site first transmit the data to the OPC server, and then send the OPC server to the OPC client, and finally store the production data received by the client in the database. This information includes device code, device name, and device Type, equipment model diagram, equipment status, operation editor, operation editing time, maintenance information, production pressure, production speed, etc. In this system, there should be corresponding operating functions, so that it can be stored and deleted simply and conveniently. This module is shown in Figure 3 and Figure 4.

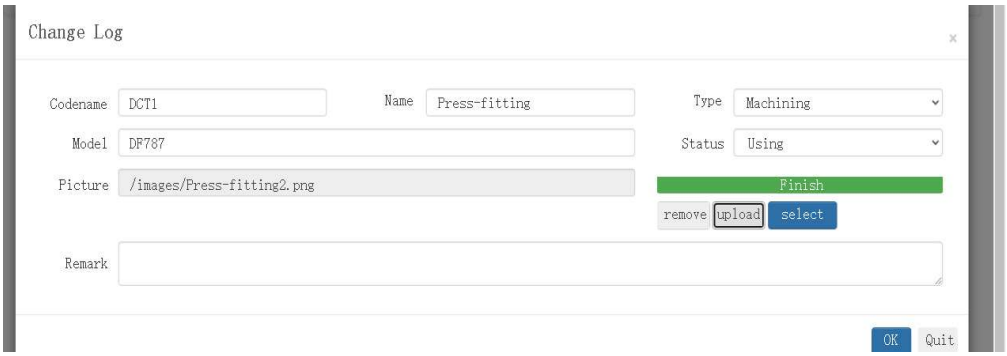

Fig. 3 Device data storage

ISSN: 2414-1895 DOI: 10.6919/ICJE.202112_7(12).0073

Equipment maintenance schedule

Add Mod Del Input

Number	Codename	Maintenance type	Maintenance content	Planning time	Remark
1	E01	Daily	Overhaul	2020-12-13	
2	E01	Weekly	Replace	2020-12-14	
3	E02	Daily maintenance	Overhaul	2020-12-13	
4	E03	Return to factory	Damaged parts	2020-12-01	
5	E04	Home maintenance	Damaged parts	2020-12-01	
6	E01	Shift maintenance	Overhaul	2020-12-01	

Fig. 4 Device data storage

4.2 Real time monitoring

In the real-time monitoring under the B/S architecture, after the customer logs into the system, the system sends a connection request to connect to the server to realize remote online access and data exchange, and the data transmitted by the server is displayed in the system in real time. The real-time monitoring system requires that all kinds of production data at the production site can be displayed in this system page in real time after being collected and transmitted, and operating instructions can be issued from this system to the production site, and stored and recorded in the SQL database. . As shown in Figure 5 and Figure 6, the information about the operating status of the device is clearly displayed on the page. Various types of data have their set normal value range in the background. If the value range is exceeded, the operating status button will change from green normal operation to red. Operation is abnormal.

Fig. 5 Equipment display diagram

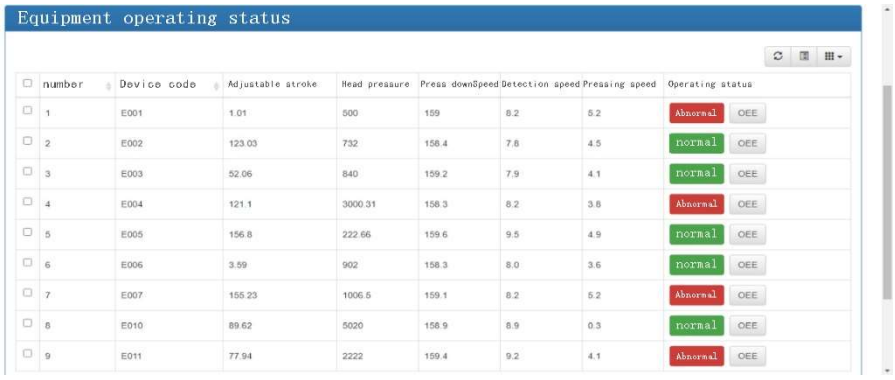

number	Device code	Adjustable stroke	Head pressure	Press downSpeed	Detection speed	Pressing speed	Operating status	
1	E001	1.01	500	159	8.2	5.2	Abnormal	OEE
2	E002	123.03	732	158.4	7.6	4.5	normal	OEE
3	E003	52.06	840	159.2	7.9	4.1	normal	OEE
4	E004	121.1	3000.31	158.3	8.2	3.8	Abnormal	OEE
5	E005	156.8	222.66	159.6	9.5	4.9	normal	OEE
6	E006	3.59	902	158.3	8.0	3.6	normal	OEE
7	E007	155.23	1006.5	159.1	8.2	5.2	Abnormal	OEE
8	E010	89.62	5020	158.9	8.9	0.3	normal	OEE
9	E011	77.94	2222	159.4	9.2	4.1	Abnormal	OEE

Fig. 6 Equipment operating state diagram

ISSN: 2414-1895 DOI: 10.6919/ICJE.202112_7(12).0073

4.3 Graph analysis

When the production data is collected, the analysis of the production data is also an important part of the production process, which is conducive to optimizing and arranging future production plans. At the same time, in order to facilitate the daily production analysis and management of the staff, it can be in the system Add the functional module of chart analysis. As shown in Figure 7, it is possible to calculate the length of equipment failure and the qualification of products produced to complete the production of related charts.

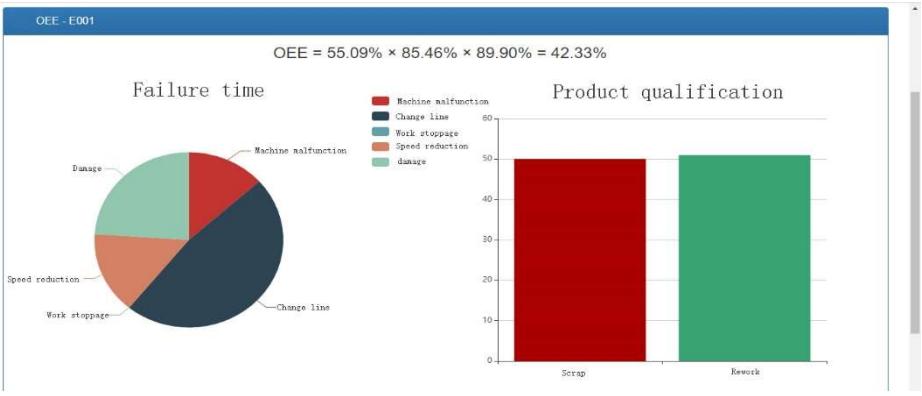

Fig. 7 Graph analysis

4.4 Alert reminder

The safety of the production process is the top priority. During the operation of the production line, abnormalities will inevitably occur. At this time, if you do not promptly remind, it may cause greater consequences and cause great losses to the production. Therefore, in order to avoid this If the situation occurs, an alarm prompt function is added to the system, and when an abnormality occurs, an alarm prompt sound and a pop-up window can be issued.

5. System deployment

This system is mainly deployed on industrial control stations on a certain brand of engine production line. Among them, the system's PLC mainly controls the stations including finishing, pressing, air tightness testing, cleaning and warehousing, etc., through OPC technology, through the KEPServerEX server the information is collected and sent to the database for storage and transmission. The programmable logic controller of this system mainly uses Siemens S7-1200 as the PLC control product of this system. The specific configuration information of KEPServerEX is shown in Table 1. At the same time, as a web client, the system can be deployed at the production site and remotely, which is convenient for staff to monitor and manage. OPC System structure diagram as show in Figure 8.

Table 1 KEPServerEX Configuration table

DeviceName	Model	ID	Description
OP010	S7-1200	192.168.0.201	010 Finish milling bottom surface
OP020	S7-1200	192.168.0.202	020 Semi-finished plane
OP030	S7-1200	192.168.0.203	030 Finished injector hole
OP040	S7-1200	192.168.0.204	040 Finished valve seat, conduit hole
OP050	S7-1200	192.168.0.205	050 Machining connector holes
OP060	S7-1200	192.168.0.206	060 Intermediate cleaning
OP070	S7-1200	192.168.0.207	070 Press-fit bowl plug
OP080	S7-1200	192.168.0.208	080 Pressure riveting injector bushing
OP090	S7-1200	192.168.0.209	090 Airtight test
OP100	S7-1200	192.168.0.210	100 Press fitting catheter
OP110	S7-1200	192.168.0.211	110 Press-fit valve seat
OP120	S7-1200	192.168.0.212	120 Finishing

ISSN: 2414-1895 DOI: 10.6919/ICJE.202112_7(12).0073

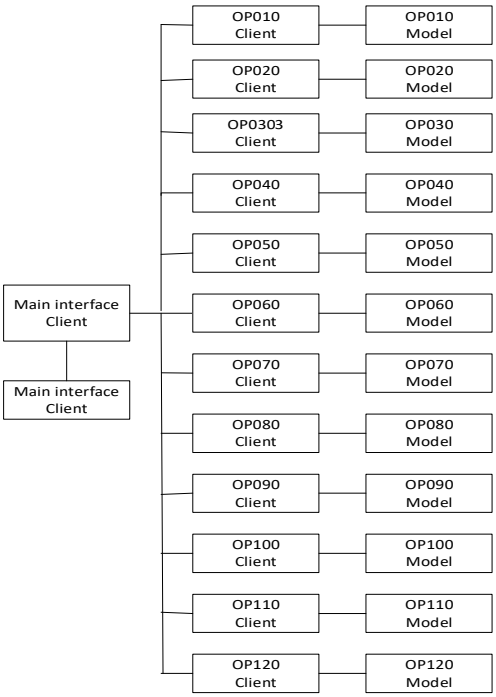

Fig. 8 OPC System structure diagram

6. Conclusion

This article mainly describes the implementation of a monitoring system based on OPC industrial site information collection. Compared with the previous monitoring system, this system integrates the BS mode and the industrial site OPC technology to remotely monitor the production site information online. At the same time, it has traditional data transmission and storage, chart analysis and alarm prompt functions. In the actual verification, there is a certain delay, but the stability is good, which provides a certain reference meaning for the design and compilation of the software of the upper computer in the future.

In the subsequent work, there are mainly two aspects: one is to optimize the collection, transmission and storage of production information to reduce the indicator of system delay; the other is to add 3D animation to simulate part of the production line As a reference for the 3D virtual modeling of the entire production line.

References

[1] Peng Yue. Research and implementation of service-oriented future Internet application provision mechanism [D]. Beijing University of Posts and Telecommunications, 2014.

[2] Jing Shaoxue. Design of Embedded Remote Video Monitoring System Based on INTERNET [D]. Jiangsu University, 2006.

[3] Feng Decheng. Research on the Application of ArcGIS in Safety Production Supervision System[D]. Donghua University, 2013.

[4] Tan Pingyu. Research on the release system of earthquake early warning information based on GIS[D]. Institute of Engineering Mechanics, China Earthquake Administration, 2014.

[5] Gan Mang. Research and development of wireless local multi-channel digital audio broadcasting terminal [D]. Jilin University, 2014.

[6] Qin Zeye Gao Gaimei. Research on the Application of NHibernate in Laboratory Information Management System[D]. Friends of Science, 2010.

[7] Zhang Haisheng. Research and implementation of township e-government system [D]. Tianjin University, 2012.

ISSN: 2414-1895 DOI: 10.6919/ICJE.202112_7(12).0073

[8] Yi Wei. Research on Integration and Optimization of Water Conservation Information Collection System and Data Security Strategy [D]. Huazhong University of Science and Technology, 2015.

[9] Zhu Yuhong. Design and implementation of enterprise energy efficiency trajectory monitoring system software [D]. University of Electronic Science and Technology of China, 2014.

[10] Jiang Hanhang. Research on wireless sensor network positioning and management system on the sea surface [D]. Dalian Maritime University, 2014.

[11] Liu Jiayun Wan Zhou. On the design and implementation of home-school interactive system based on Web technology [D]. Computer Knowledge and Technology, 2010.

[12] Chen Qiaoping. Research on WiFi-based satellite navigation mobile terminal technology [D]. Jimei University, 2016.

[13] Yang Chunbo. Networked control system and its application in three-capacity system [D]. Jilin University, 2004.

[14] Wang Manjing. Research and implementation of lightweight software project development management system based on ACN[D]. Southwest Jiaotong University, 2009.

[15] Zhao Yun. Design and development of papermaking information integration platform based on OPC technology [D]. Zhejiang University of Technology, 2008.

[16] Yin Jian. Design and implementation of field operation information system based on Beidou technology [D]. Yunnan University, 2018.

[17] Sun Zhongji, Suipeng, Su Hongmei, Zhang Zhiyuan, Jing Hao. Analysis of the construction plan of the distribution automation main station system [D]. Hebei Electric Power Technology, 2010.

[18] Liu Ruolin. Research and implementation of network attack and defense virtual scene construction technology [D]. Beijing University of Posts and Telecommunications, 2019.

[19] Qin Weihe. Research on key technologies of industrial production of prefabricated components based on BIM [D]. Chongqing University, 2018.

[20] Yuan Zhongyan. Research and implementation of CoAP over WebSocket [D]. Beijing University of Posts and Telecommunications, 2017.