ISSN: 2414-1895 DOI: 10.6919/ICJE.202110_7(10).0076

Campus Contactless Express Delivery Robot based on Embedded System under the New Situation of Epidemic Situation

Chengliang Yan[1], Rongsong Gou[1]

[1]Chengdu University of Technology, College of mechanical and electrical engineering, Chengdu 610059, China.

Abstract

The global spread of covid-19 has a great impact on the political economy of various countries. As a concentration of people, campuses in various countries urgently need to take effective ways to eliminate potential safety hazards. With the development of e-commerce, college students have become an important part of the online shopping army and the main demander of express service. A large number of express packages will increase students' security risks. On the other hand, at present, many large business platforms are committed to the research of unmanned distribution vehicles. For example, JD and Baidu have launched unmanned vehicle distribution products, but most of these products focus on the realization of technologies such as unmanned driving, and do not pay enough attention to the "last kilometer" of express delivery in campus and community. Facing the above problems, this paper designs an embedded contactless express delivery system and realizes it by robot. The system is divided into network layer, planning layer and application layer. The network layer mainly includes the realization of robot communication mode and interaction with service objects; The planning layer mainly uses immune learning to plan the distribution route of the robot and set up the service station in the school; The application layer mainly includes robot hardware configuration, such as sensor, development board, etc. Robot is used to provide point-to-point service between express distribution station and customers. At the same time, a service station is set up inside the campus to disinfect each express to avoid secondary infection.

Keywords

Covid-19; Campus; Robot.

1. Introduction

Since the outbreak of covid-19, the political and economic impact of the world has been greatly affected. Thanks to the overall planning of the Chinese government and the hard work of medical staff, China has initially controlled the spread of the new crown. However, Xinguan has not been effectively controlled in some other countries. Taking the United States as an example, its negligence and inaction on the epidemic has led to more than 10 million confirmed cases, which poses a great threat to the health of the American people and even the people of the world. As a concentration of people and a breeding ground for the future hope of the country, the campus needs to strictly control the epidemic situation.

In recent years, intelligent robots have developed rapidly throughout the country, and good development and achievements have been made from social enterprises to robot independent R & D and innovation throughout the country [1,2]. Based on the existing technical conditions of the studio, through the and analysis of other robot research results at home and abroad, and drawing on its advantages and design experience, this paper develops a campus express robot. The development of

ISSN: 2414-1895 DOI: 10.6919/ICJE.202110_7(10).0076

campus express robot is not only theoretical analysis and research, but also a brave practice to provide convenient services for alumni, enhance the sense of science and technology on campus and promote the development of robot industry.

Thanks to the development of computer technology, artificial intelligence, sensing technology and Internet technology, intelligent robots have developed by leaps and bounds [3]. Intelligent robots can realize industry customized production and meet the different needs of different industries. At present, the domestic research on service robots has also achieved good results, such as underwater robots, floor sweeping robots, entertainment robots and so on. Intelligent robots will gradually follow human development to meet more human needs. From the perspective of service industry, with the increase of labor cost and the improvement of consumers' consumption level, public oriented service enterprises need to put forward higher requirements for their brand image, operating cost and system structure [4]. From an industrial point of view, with the maturity of robot related technology, the application range of robot will be wider and wider, which can better serve mankind. At present, JD and Taobao have developed their own express robots, but it still takes a long time to put them into use on a large scale.

2. Research content

2.1 Purpose of the study:

Although there is a precedent for the application of intelligent robots in the express industry, they have not been put into use on a large scale [5] [6]. The development of relevant technologies is not yet mature. Under the condition of highly developed science and technology, this project aims to use and improve the existing autonomous navigation technologies such as positioning, mapping and path planning, apply them to campus express distribution [7], and explore and solve various problems faced by robots in the complex environment of human-computer interaction.

2.2 Basic ideas and methods

This paper is divided into three parts. The first part is the specific real-time scheme for the robot system, which needs to consult a lot of literature; The second part is the simulation experiment on ROS platform to evaluate the experimental results; The third part is to realize the above software technology through embedded system, and debug the car. The schematic diagram is as follows:

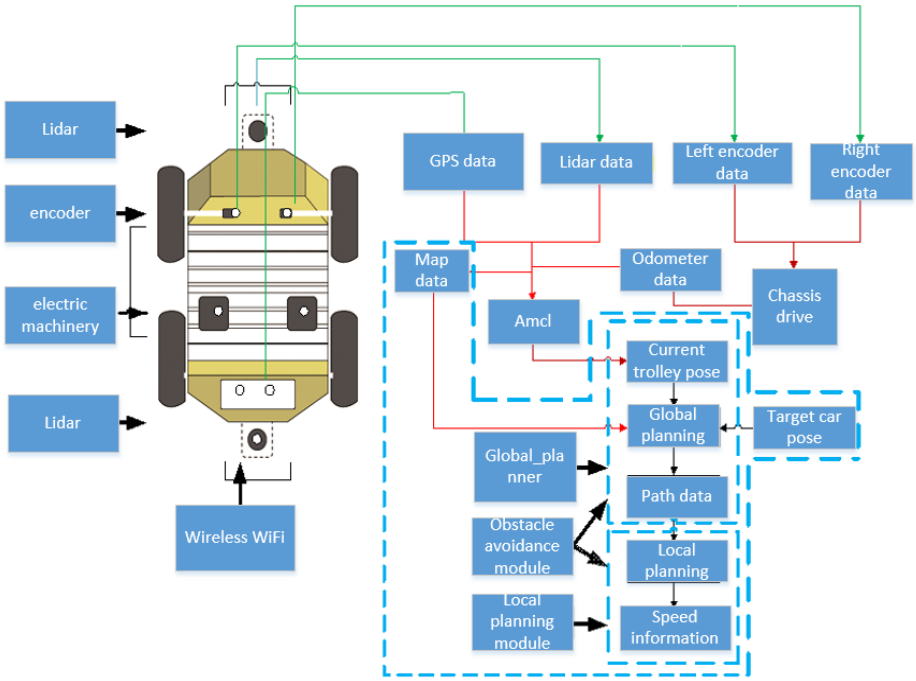

Figure 1. Schematic diagram of development

ISSN: 2414-1895 DOI: 10.6919/ICJE.202110_7(10).0076

2.2.1 GPS & IMU + encoder fusion positioning

The primary problem to be solved in this paper is the positioning problem. The traditional GPS positioning accuracy is poor and can not meet the requirements. To solve this problem, the multi-sensor fusion positioning of GPS + IMU appears, because the IMU of "passive positioning" can just make up for the short board of GPS. The former can measure the acceleration of a three-dimensional space and the rotation acceleration around the three coordinate axes of the three-dimensional space. The displacement is obtained by integrating the acceleration twice, so as to realize the position positioning. However, the two integral operations of IMU will produce large errors in the attitude calculation process of the robot, so the encoder is also needed for auxiliary positioning [8]. The encoder uses the sensor to obtain the electrical signals in the form of pulse sequence, and converts these signals into motion, reverse and position information, so as to achieve more accurate positioning. The schematic diagram is as follows:

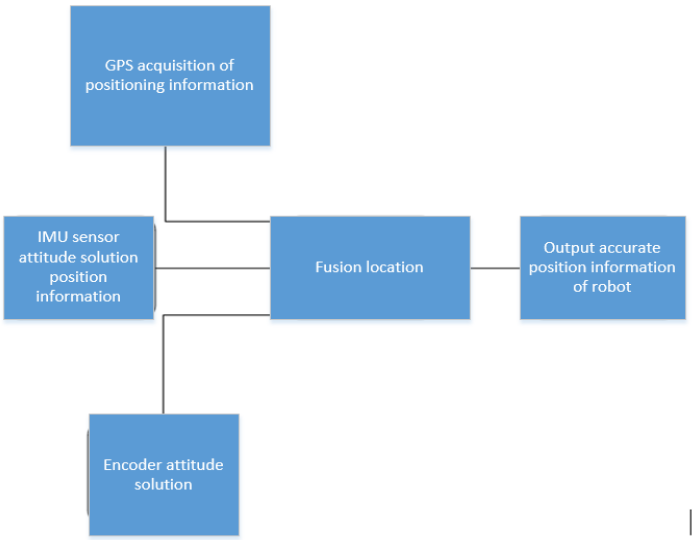

Figure 2. Positioning flow chart

2.2.2 Mapping

In order to obtain the location information of the target point, it is necessary to implant the robot into the overall map of the campus (Baidu map) and set a certain number of stations in the campus. When the robot car performs the distribution task, it will only stop at the fixed station, as shown in the following figure:

Figure 3. Campus distribution

ISSN: 2414-1895 DOI: 10.6919/ICJE.202110_7(10).0076

2.2.3 Path planning

After the starting point, end point and map are known, the navigation problem can be transformed into a path planning problem. The robot needs to find a collision free safety path from the starting point to the end point, make comprehensive judgment on the dynamic environment and make intelligent decision. Its main tasks are: avoiding obstacles and finding a better path. Path planning is divided into global path planning and local path planning. Global path planning is to plan a path for a machine in a known environment. Its accuracy depends on the accuracy of the environment, but when the environment changes, this method can not meet the requirements. Local path planning focuses on the current environment of the robot, establishes a real-time map, so that the robot has good obstacle avoidance ability, and can detect the environment through sensors to obtain the position and geometric information of obstacles. With the cooperation of global path planning and local path planning, the robot can better plan the walking path from the beginning to the end. The flow chart is as follows:

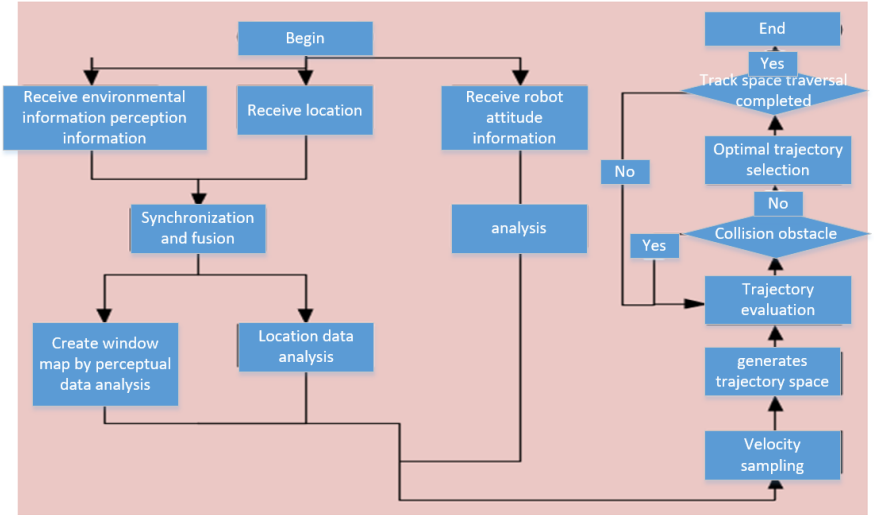

Figure 4. Flow chart of path planning

At the same time, in order to improve the distribution efficiency of the robot, the immune algorithm is used to optimize the distribution path of the robot. Using the principle of biological immunity, the immune algorithm regards the problem to be optimized as an antigen and the solution of the problem as an antibody. Then the evolution and maturity mechanism of antibodies with different affinity is the process of finding the optimal solution of the objective function. The binding degree between antibodies and antigens is the affinity, and the affinity corresponds to the function value of the solution of the problem. In general, the steps of immune algorithm are as follows:

1. Antigen recognition: description of objective function and constraints of optimization problem.

2. Initial population generation: the antibody is defined as the solution of the problem.

3. Affinity calculation: calculate the affinity between antibody and antigen.

4. Clonal selection: antibodies with high affinity to antigens are preferentially propagated, antibodies with high concentration are inhibited, and antibodies with low affinity are eliminated.

5. Population renewal: evolutionary renewal of antibodies using crossover and mutation operators. Crossover refers to selecting two individuals in the population and exchanging one or more bits on the coding string of two individuals to generate new individuals. Mutation refers to a certain probability to change one or more bits on the individual coding string. It is an auxiliary way to generate new individuals. Under the action of crossover operator and mutation operator, it can ensure that the algorithm can complete the optimization process with high efficiency.

6. Termination condition judgment: judge whether the termination conditions are met (find the optimal solution).

ISSN: 2414-1895 DOI: 10.6919/ICJE.202110_7(10).0076

2.2.4 User ID identification based on nvida TX2

Identification is required between the robot and the storage boxes of parcels and service stations. Nvida Jetson TX2 has image recognition function and can effectively identify ID code information. The service stations on campus have fixed codes, and each package to be delivered needs to be matched with the code of the service station. In this way, the robot knows which distribution station to send the package to the campus.

2.2.5 Service station location selection

Considering the uneven distribution of service objects in the fixed area, we need to use k-means algorithm to cluster the overall service objects, and select the service sites according to the algorithm results. Clustering algorithm is an unsupervised learning algorithm. It is not only a statistical analysis method to study and solve classification problems, but also an important method of data mining. Based on the similarity between data, this algorithm has more similarity between a cluster pattern than between patterns not in the same cluster. In addition, according to different data segmentation modes, it is divided into several categories based on division, hierarchy, density, grid and model [10]. The k-means algorithm is introduced below. K-means algorithm is a clustering algorithm based on partition. When classifying a given data set, it will first initialize a cluster number k, then randomly select k data objects from N data objects as the initial cluster center point, and then calculate the distance from other data objects to each cluster center, Then the point closest to the cluster center is divided into the cluster represented by the nearest cluster center. Then recalculate the cluster center of each cluster, and then iterate continuously until the clustering criterion function converges or the cluster center does not change twice [11]. After this method, each iteration increases the compactness within clusters and reduces the similarity between clusters. When there is no change in the cluster center, the clustering is optimal. The algorithm is implemented as [12]:

(1) Euclidean distance

$$Dist(Xn,Ck)=||Xn-Ck||2 \quad k=1,\ldots,k \tag{1}$$

C_K is the center of each cluster, and the formula represents the distance from each data point to the cluster center.

(2) Manhattan distance:

$$d(pi)=\min\{|i-j|+|pi(i)-pi(j)|\} \tag{2}$$

The above formula represents the sum of the absolute wheelbase of two points in the standard coordinate system.

2.2.6 TCP/IP signal communication

TCP / IP communication is adopted, wireless WiFi is installed on the express car and received by relevant modules to realize real-time communication between people and vehicles.

simulation experiment

In order to test the feasibility of the implementation of the above technical conditions, it is necessary to carry out simulation experiments on gazebo, evaluate the feasibility of the above system according to the experimental results, and improve and improve it at the same time.

2.3 Embedded system implementation

Hardware preparation: stm32f4, DC motor with encoder, power supply, NVIDIA jet TX2, TTL to USB, sensor: IMU and lidar.

Software preparation: STM32 terminal: Motor PWM control speed, motor speed measurement, motor PID speed control, acquisition of heading angle, STM32 and ROS communication.

TX2 end: installation of Linux system, installation of ROS, preparation of robot model file, creation of the most basic function node of ROS trolley, installation of drawing algorithm and installation of navigation algorithm.

ISSN: 2414-1895 DOI: 10.6919/ICJE.202110_7(10).0076

3. Distribution process

(1) The target customer places an order in the mall, fills in the detailed address (specific to a student dormitory) and notes whether to select the express robot for delivery.

(2) Discuss cooperation matters with the express station in advance and stationed the express robot in each express distribution station.

(3) The distribution station will need to turn on the power supply of the express robot, let the robot identify the delivered package and put it into the robot's container, and send a short message to remind the distribution target to pick up the goods.

(4) After the package is loaded, the robot will carry out path planning and search according to the information of each distribution point.

(5) The robot goes to the distribution station near the target customer. Each distribution station is equipped with a closed container. After the robot arrives at the distribution station, the container identifies the robot and opens the valve. The robot takes out the package, puts it in the storage box and drives to the next distribution station.

(6) The service station disinfects the package, and the customer arrives at the distribution station to pick up the goods by scanning the code.

4. Conclusion

The campus express robot can realize the express delivery function from the off campus express station to each service point in the school. So that students can easily get express without going out of school. At the same time, after the anti-virus of the service station in the school, the secondary infection of the virus can be avoided and the risk of new crown transmission can be reduced. Express robot will become a scenic spot on campus, encourage students to dare to innovate, practice bravely, and actively devote themselves to scientific research, which has practical application value. In addition, the research content of this paper also belongs to the "last kilometer" of express delivery, which is the end of the whole logistics link. It is also the only link that can directly contact customers face to face, which is of great significance. Taking the campus express with relatively large express business volume as the distribution object and based on the unmanned distribution robot, this paper carries out the research on the unmanned distribution mode and distribution path optimization in the closed area. This achievement can be used as a demonstration of express delivery in the campus, closed community and large and medium-sized enterprises.

References

[1] Zhao Jianming. Taking automatic sorting robot as an example, an analysis of the application of automation technology in express enterprises [J]. China's strategic emerging industry, 2018, 000(01X):P.54-55.

[2] Cai Zixing. Research on intelligent robots in China [J]. Journal of Putian University, 2002, 9(3):36-39.

[3] Bulusu N, Heidemann J , Estrin D . GPS-less low-cost outdoor localization for very small devices[J]. IEEE Personal Comm Magazine, 2000, 7(5):28-34.

[4] Sukkarieh S, Nebot E M , Durrant-Whyte H F . A high integrity IMU/GPS navigation loop for autonomous land vehicle applications[J]. IEEE Trans.robot. & Automat, 1999, 15(3):572-578.

[5] Liu Jie. Research on robot global path planning based on environment map [D]. Wuhan University of technology, 2013.

[6] Bao Qingyong, Li shunmo, Shen Yi, et al. Overview of local path planning for autonomous mobile robots [J]. Sensors and microsystems, 2009(09):8-11+18.

[7] Zhang Yuan. Design and research of bank intelligent robot [D].

[8] Lu Xizhen, Peng Wenwen, Xiong Xianqing, et al. Research on the application of robots in the production of customized furniture [J]. Furniture, 2019, 40(01):76-80.

[9] Zhao Wenchong. K-means clustering algorithm based on influence space and its application [D]. Taiyuan University of science and technology,8.

ISSN: 2414-1895 DOI: 10.6919/ICJE.202110_7(10).0076

[10] Tang Yeqing. Research on improvement of K-means algorithm [D]. Capital Normal University. 2012, 19-20.

[11] Laccetti G, Lapegna M, Mele V, et al. Performance enhancement of a dynamic K-means algorithm through a parallel adaptive strategy on multicore CPUs[J]. Journal of Parallel and Distributed Computing, 2020.12.3.

[12] Blackburn, Simon R,Homberger, Cheyne,Winkler, Peter. The minimum Manhattan distance and minimum jump of permutations [J], Journal of Combinatorial Theory, Series A, 2019.