ISSN: 2414-1895 DOI: 10.6919/ICJE.202008_6(8).0010

Simulation and Optimization of Cold Chain Logistics Warehouse Based on AnyLogic

Yichao Guo

College of Transport & Communications, Shanghai Maritime University, Shanghai 201306, China.

Abstract

The main functions of modern warehouse include storage, processing, loading and unloading, and circulation. In this paper, the simulation of cold chain logistics warehouse is optimized by using AnyLogic, and the final optimization point is to solve the problem that the cold chain logistics warehouse does not produce inventory after the end of the work cycle, and use subcontracting distribution, so as to ensure the freshness of products and not waste resources, and ultimately achieve cost savings.

Keywords

AnyLogic, Forklift truck, Warehouse, Automation.

1. Introduction

The cold chain logistics is more special and hot in comparison with other logistics, it pays more attention to timeliness to ensure the freshness and quality of the goods themselves while needing to meet the transportation needs, moreover, as people's living standards improve, it also reflects the increasing demand for cold chain logistics. Socialism with Chinese characteristics has crossed the threshold into a new era, the main contradiction of our society has been transformed into the contradiction between the people's ever-growing need for a better life and unbalanced and inadequate development, the development status of cold chain logistics does not match its soaring demand[1].

The main functions of modern warehouses are storage, circulation, transit, goods concentration, goods sorting and processing. In many developed countries, a large part of warehouses have been transformed into circulation centers or processing centers that do not take storage as their main function. In any country with a certain economic size, in order to ensure the normal operation of the national economy and the healthy circulation of the market, warehouses are indispensable; besides, warehouses with processing center function can obtain high added value in circulation and can play a role that the production link cannot play.

However, because the cold chain logistics is still in the development stage, many factors such as production processes, staff technology, policy clauses and hardware devices are still relatively immature, which cause the indicators of some products or raw materials to be unqualified and abandoned due to the above reasons, eventually, the whole production cost increases and the product quality is low, so AnyLogic is used to simulate the cold chain logistics warehouse to optimize the links in it in this paper, and finally the goal is achieved.

2. Characteristics and Processes of the Cold Chain Logistics Warehouse

Owing to the particularity and timeliness of transported goods, the cold chain logistics is different from ordinary logistics in production and distribution link, which does not support continuing the work of the previous day the next day, so it is inevitable that some resources will be wasted. Furthermore, due to changes of ambient temperature in the transportation or processing or improper

ISSN: 2414-1895 DOI: 10.6919/ICJE.202008_6(8).0010

operation of devices by the operator, the above situations also occur[2]. In the whole cold chain logistics process, the most worthy of attention and the most easily missed link are the movement among different locations in the production process from raw materials into finished products, this link is the most difficult to control, in these movements, ensuring the quality of the transported goods becomes the shortest piece of wood that determines the lower limit of the cold chain logistics. Therefore, many enterprises choose to use cold chain logistics warehouse special forklifts replace traditional belts or manual transportation lines, its advantage is to have a certain highly efficient work efficiency to ensure the freshness of goods while increasing mobility. The data shows that the Hyster electric forklift J1.50EX (cold storage type) can complete the loading and unloading of a standard low-temperature container in 15 to 20 minutes, it can load and unload at least one pallet with about 1.5 tons of goods per minute, it also reduces the management and cost of labor resources while saving working time. It can be seen from the above that the use of cold storage forklifts not only greatly improves the logistics speed, but also provide more reliable guarantee for cold chain operation; it reduces the logistics cost of unit goods while improving operational safety[3].

As far as the cold chain logistics warehouse is concerned, the main process consists of the following links: the stock trucks transport the raw materials to the stock point, and the forklifts move the raw materials to the shelves. The next step is to order trucks to move the raw materials to the machine tool for finished product processing, and then move the finished product to the finished product shelves through the forklifts, waiting for the arrival of the shipment truck. In the whole production process, the main agents involved are: stock trucks, shipment trucks, machine tools, shelves, forklifts. The area is divided into: stock truck driving route, shipment truck driving route, raw material area, finished product area, processing area and forklift parking area. The parameters need to be determined include: how to determine the input of raw materials, the working time of machine tool, the speed and efficiency of forklift, when storing the finished product and need to contact the shipment trucks, and the priority of tasks when tasks overlapping.

In order to make the model simulation reasonably carry out process, several Boolean variables are added to the model and combined with the Java language for control.

3. Establishment of AnyLogic Cold Chain Logistics Warehouse Model

This paper mainly uses various components of process modeling library in AnyLogic, the process modeling library is a powerful tool for analysts to conduct detailed operation modeling on logistics, medical treatment, bank, manufacturing industry, and other dynamic business processes and services. The process modeling library promotes the simulation of business processes, which make users understand the dependency relationship between process dynamics and process components, and gain insight of decision-making.

With the help of process modeling library, any business process can be quickly and easily visualized, and animation function of AnyLogic is used to verify the results. This simulation uses the inject function and AnyLogic own random distribution function component input system in input aspect, then shelf, forklift, machine tool and other agents are added to build the system, and simple Java instruction is used to achieve control and output statistics for the whole process. The difficulty lies in how to choose the correct statistical approach to display the results and correctly select realistic random distribution function of input data, and formulates the proper time node to make the whole simulation process logical.

The specific model is shown in Fig.1. We first consider the input of raw materials in the first step of modeling, we assume that the raw materials transported by truck are about 20 to 30, when the MAIN program starts running, the JAVA language command is added: the stock truck arrives.inject(1), one stock truck is added into the field, and then the Boolean value is changed, in stock=true, and then the raw materials are unloaded through the truck, the command here is: raw materials arrive. inject((int)uniform(20,30)); when a transport truck arrives at stock area and several raw material agents are introduced, the distribution used here is a uniformly distributed random number, its

ISSN: 2414-1895 DOI: 10.6919/ICJE.202008_6(8).0010

minimum value is 20 and maximum value is 30, when the forklifts move all the materials to the machine tool, namely when the shelves are free, and there is no stock truck and raw materials in the stock area, execute the statement if(!in stock && material area.size()<1) stock truck reaches.inject(1); an stock truck is added to repeat the above operation. And when there is no raw material in the stock point that needs to be carried by forklift, execution material area stock= material area.size(); if(self.queueSize()==0) unload. stopDelayForAll (); statement, order the stock truck to leave, the above is the activity cycle of the stock truck.

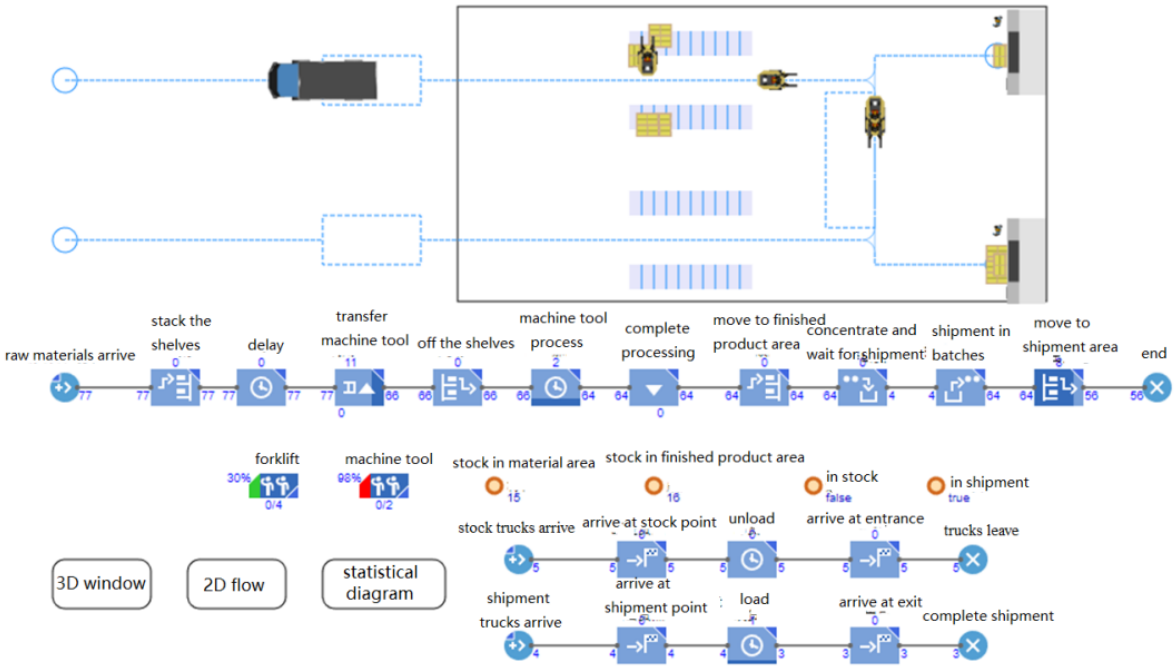

Fig.1 AnyLogic warehouse simulation model

The second step is to consider the behavior mode of the forklift agent, the initial value of the number of forklifts is set to 4, according to the survey, the moving speed is set to 5 kilometers per hour, which best meet safety indicators, all moving links are replaced by forklift resources and as substitute, the tasks of forklift have the following points separately: moving the raw materials from the stock point to the shelves, unloading the raw materials from the shelves and moving them to the machine tool for processing, after the processing is completed, moving the finished product to the finished product shelves, the finished products are unloaded from the finished product shelves and collectively carried to the shipment truck and moved out from the warehouse. Here we set the priority of the tasks, since moving raw materials to the shelves can prevent the frozen goods from being damaged; this task is the most important, the priority is set to 20, and the priority of moving the product is greater than that from the machine tool, so set 10 and 4, respectively, moving from the shelves to the machine tool is 1, the rest is null, namely forklift runs when there is an idle. If the forklift is idle, it will automatically return to the parking area and wait for the next command.

The shelves are divided into two, one is the raw material shelf and the other is the finished product shelf, they are uniformly set as double shelf and one channel, the number of units is 10, the throat unknown is 1, the number of layers is 3, and the layer height is 30. The forklifts are used to move materials or finished products to the shelves.

The initial value of the machine tool is set to two, and the static resource types are named machine tool one and machine tool two, respectively, the machine tool processing time also uses the trigonometric function (10, 20, 15), the maximum processing time is 20 minutes, and the minimum

ISSN: 2414-1895 DOI: 10.6919/ICJE.202008_6(8).0010

processing time is 10 minutes, the mathematical expectation is 15 minutes. Moreover, each machine is arranged with two technicians to assist processing.

In the end, it is necessary to set the finished product shipment truck, here the java command used is if (in shipment&& self.size()>=16) when the shipment truck arrives. inject(1); when it is not in the shipment state and the capacity of the finished product shelf is greater than 16, that is to say, when there are 16 finished products on the shelf, one shipment truck is allocated, and the forklifts are used to move the goods according to the task priority, when the shipment operation is completed, the Boolean value is changed, stock=false. The specific agent information is shown in Table.1.

Table.1 main information of the agent

agent	quantity	parameter 1	parameter 2
stock truck	inject (1)	if (! stock&&material area. size () <1) stock truck arrive. inject(1);	size (); if (self. queue Size () ==0) unload. Stop Delay for All ()
raw material	inject((int)uniform (20,30))		
forklift	4	5 kilometers per hour	
machine tool	2	triangular (10, 20, 15)	
shipment truck	inject (1)	if (! stock&& self. size ()>=16) shipment truck arrive. Inject (1);	size (); if (self. queue Size () ==0) stock. Stop Delay for All ()
shelf	2	two shelves and one channel	number of units: 10throat: 1 number of storey: 3 storey height: 30

4. Analysis of Model Output Result

Assuming that the run time of warehouse is from 6 a.m to 11 p.m. The problem is that the work rate of the machine tool is generally close to 100%, the average work rate is 98% and the final carried finished product is only about 50, the reason may be that the number of machine tools is too small or the machine tool and working time are too long, so in the subsequent experiments, the number of machine tools is increased to 5 and record the experimental data, in order to prevent the machine tool from being damaged, we try to ensure that the average working rate of the machine tool is below 90%, after a lot of experiments, the number of machine tools is finally determined to be 10, which is the most appropriate, the specific work rate is shown in Fig.2, and the number of carried finished products is three times the first test, the risk of machine tool damage is reduced while ensuring efficiency.

As far as forklift resources are concerned, under the condition of ten machine tools, the number of five forklifts can just ensure efficiency and avoid excessive resource occupancy.

Fig.2 resource work rate

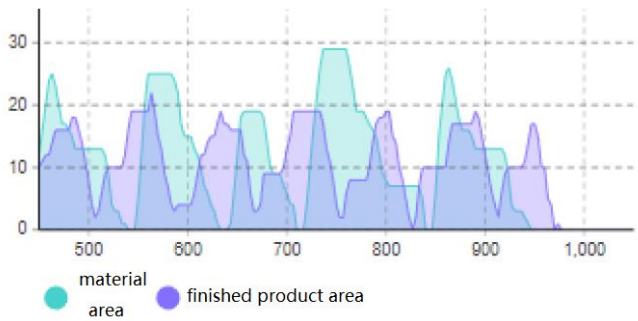

Fig.3 change diagram in quantity of materials and products

ISSN: 2414-1895 DOI: 10.6919/ICJE.202008_6(8).0010

After dealing with the problem of resource allocation, it was found that when the one-day work cycle of warehouse ended, there was still a certain number of products left in the warehouse, the main reason was that the quantity of the last batch of goods did not meet the quantity requirements for shipment, if the shipment truck is forced to be added at this time, the unit cost of transporting goods will be increased, therefore, the new model combining traditional distribution and crowdsourcing distribution is adopted in the next optimization model.

5. Model Optimization

The crowdsourcing model is to publish data by using big data platform, receives goods through individual or team, and finally completes transportation tasks. Because the cost is evaluated through the intelligent system calculation scheme, as far as small-scale transportation is concerned, it has certain logistics distribution efficiency while sharing economy, and because it is one-to-one distribution, it has timeliness and accuracy; the transportation schemes generated by the system generally meet the actual situation. Common in the market are "Cailiao Logistics" and "Dada Logistics" [4].

If the crowdsourcing model is used in the whole production process, because the sales points propose a certain number of indicators, then the crowdsourcing model will generate repetitive orders at this time, under the circumstances, traditional truck transportation is more suitable. However, when most sales points are closed, crowdsourcing logistics is more flexible than large trucks while reducing costs to a certain extent, and finally clears inventory.

As far as the first problem is concerned, we assume that the raw materials are not intact before entering the warehouse, suppose that some raw materials deteriorate due to accidental heating during transportation, here we set up a quality inspection link before the raw materials enter the warehouse, 95% of the raw materials are intact, 5% of the raw materials are deteriorated and cannot be processed.

As far as the second problem is concerned, it was found that after many simulations the last batch of goods did not reach the quantity index of shipment truck, finally left in the warehouse and caused the goods to fail to circulate in time, our methods are: first, real time and working time elements are added for the model. After 8 o'clock, no more stock will be made. Products after 9 o'clock no longer circulate through stock trucks, but use crowdsourcing trucks transport single goods at low cost through online platforms, here we also use branch nodes.

We observed the final results of the model after these two places are optimized, found that all the goods completed circulation after the warehouse was closed, the utilization rate of each resource all was about 80%, the simulation and optimization were successful.

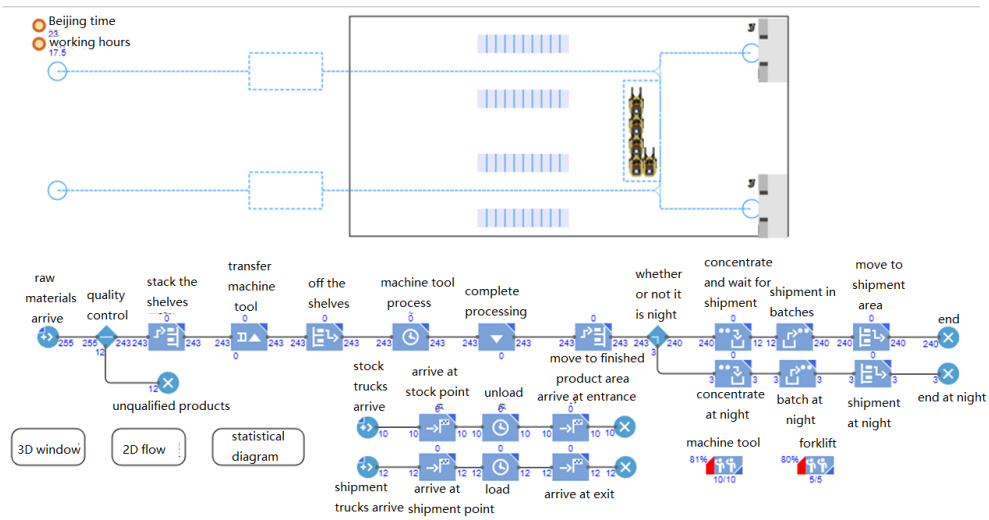

Fig.4 warehouse model after optimization

ISSN: 2414-1895 DOI: 10.6919/ICJE.202008_6(8).0010

Table.2 data comparison before and after model optimization

variable	before model optimization	after model optimization
final material inventory	15	0
final product inventory	16	0
crowdsourcing truck	0	3
final shipment	198	243

6. Conclusion

This simulation mainly realized the simulation for the cold chain logistics warehouse workflow, simulated the resource allocation of each work link through AnyLogic, moreover, found the shortcomings in the conventional schemes, optimized them by adjusting the model, the final data also proved the feasibility of the scheme, also played a positive role in cost savings and the optimization process while optimizing process, and brought inspiration for the better plan in the future as well.

References

[1] Ding Xiaohui. Logistics Simulation of Distribution Center of Fresh Agricultural Product Cold Chain System Based on AnyLogic[J]. China Circulation Economy, 2020(04): 11-13.

[2] Diao Yishuai, Liu Fang, Cheng Xudong. Analysis and Prospect of Dairy Products Cold Chain Logistics in Beijing[J]. Agricultural Outlook, 2019, 015(007):102-107.

[3] Xia Han. Cold Chain Forklift Escorts Cold Chain Logistics[J]. China Storage & Transport, 2013, 000(008): 80-81.

[4] Liu Chunling, Wang Junfeng, Li Jizi, et al. Simulation and Optimization Model Of Cold Chain Logistics Shipment under Crowdsourcing Mode[J]. Computer Integrated Manufacturing Systems, 2019(10).

[5] Duan Beibei. Research On Optimization of Cold Chain Logistics Distribution in B Chain Convenience Store[D]. Beijing Jiaotong University, 2019.

[6] Wang Yubin, Lei Huaiying. Logistics Simulation of Fruit and Vegetable Cold Chain System Distribution Center Based on AnyLogic[J]. Journal of Southeast University(Philosophy and Social Science), 2018, 20(S2): 20-22+35.

[7] Yang Fang, Zou Yifeng, Dai Enyong. Distribution Center Logistics Operation Optimization of Fruit and Vegetable Cold Chain System Based on AnyLogic[J]. Journal of Central South University of Forestry & Technology, 2016, 36(07): 141-148.

[8] Li Gai. Study on the Improvement of the Cold-chain Distribution Center [D]. Xi'an Technological University, 2016.

[9] Wang Xuhui, Zhang Qilin. Construction of Cold Chain Logistics System of Fresh Agricultural Products Based on Internet of Things: Framework, Mechanism and Path[J]. Journal of Nanjing Agricultural University (Social Science Edition), 2016, 16(01): 31-41+ 163.

[10] Wang Qin. Study on Optimization of Location And Truck Routing Problem with Time Windows for Cold Chain Product Logistics[D]. Changan University, 2015.