International Core Journal of Engineering Volume 6 Issue 7, 2020
ISSN: 2414-1895 DOI: 10.6919/ICJE.202007_6(7).0004

# Air Conditioning Temperature Control Based on Adaptive Neural Fuzzy PID

Tao Pang[1], Xiangguo Sun[1] and Chengzhong Pu[1]

[1]Sichuan University of Science & Engineering, Yibing 644600, China.

## Abstract

**In view of the nonlinear and large lag characteristics of air conditioning temperature control, traditional PID control and fuzzy neural PID control are difficult to achieve the ideal control effect, in order to ensure the stability of the temperature system, a fuzzy neural PID controller is established. The system first integrates the fuzzy control and the neural network into the fuzzy neural network system, takes the temperature deviation value and the deviation value change rate as the input signal, obtains the three input parameters of PID, and then controls the compressor through the PID closed-loop control system to achieve the air conditioning temperature control. The simulation results show that the fuzzy adaptive PID control can improve the adaptive ability and robustness of the air conditioning temperature control system, improve the dynamic and static performance of the system, and achieve the expected control effect of nonlinear and large lag systems, which has important reference value for practical application..**

## Keywords

**Air conditioning; Fuzzy neural network; Temperature control; Robustness.**

## 1. Introduction

The temperature control of air conditioning is a large lag, nonlinear, delay time lag and very complex control process, so a single use of PID controller can not meet the process control requirements. In recent years, relevant researchers have adopted the fuzzy PID control technology to conduct real-time online control of the temperature control system, but the disadvantage of such technology lies in the controller's lack of self-study ability and self-adjustment ability [1]. If the fuzzy neural network is combined with the traditional PID controller, the response of the temperature control signal will be faster and the overshoot quantity will be smaller. In this paper, aiming at the problem of air conditioning temperature control, combining the fuzzy PID technology and neural network, a fuzzy neural PID controller is established to control the air conditioning temperature.

## 2. Overall design of the control system

### 2.1 Operating principle of air conditioning

The essence of air conditioning cooling and heating is the movement of heat throughout the temperature cycle.

As shown in FIG. 1, when air conditioning is cooled, the gas CFCs (freon, a refrigerant) is pressurized by the compressor and becomes a high-temperature and high-pressure gas. It enters the heat exchanger of the outdoor unit, condenses, liquefies and releases heat, and becomes a liquid. Liquid CFCs through the throttle device decompression, into the heat exchanger of the indoor machine, vaporization and absorption of heat, become a gas, at the same time absorb the heat of the indoor air,

ISSN: 2414-1895 DOI: 10.6919/ICJE.202007_6(7).0004

so as to achieve the purpose of reducing the indoor temperature. Become the gas CFCs again into the compressor to start the next cycle [2].

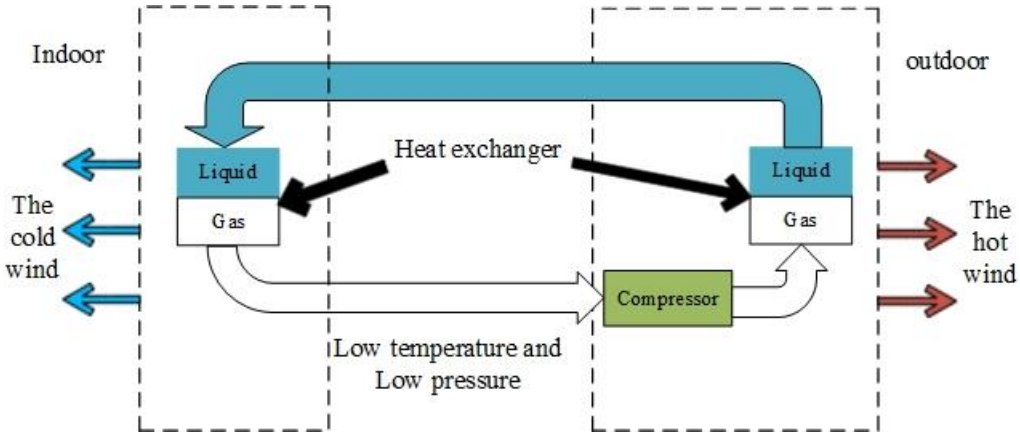


**Figure 1.** Air conditioning refrigeration process

As shown in FIG. 2, when air conditioning is heated, the gas CFCs is pressurized by the compressor and becomes a high-temperature and high-pressure gas. It enters the heat exchanger of the indoor machine, condenses, liquefies and releases heat, and becomes a liquid. Liquid CFCs through the throttle device decompression, into the heat exchanger of the outdoor machine, vaporization and absorption of heat, become a gas, and absorb the heat of the outdoor air. As the gas CFCs enters the compressor again to start the next cycle [3].

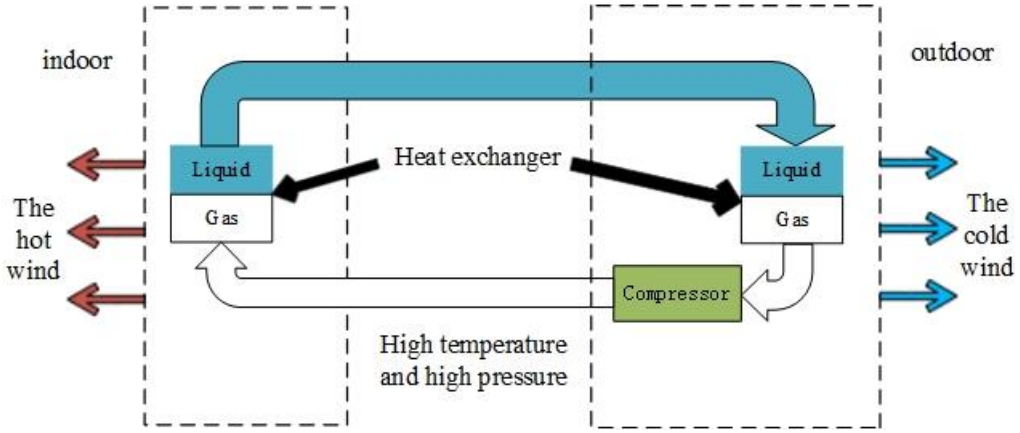


**Figure 2.** Air conditioning heating process

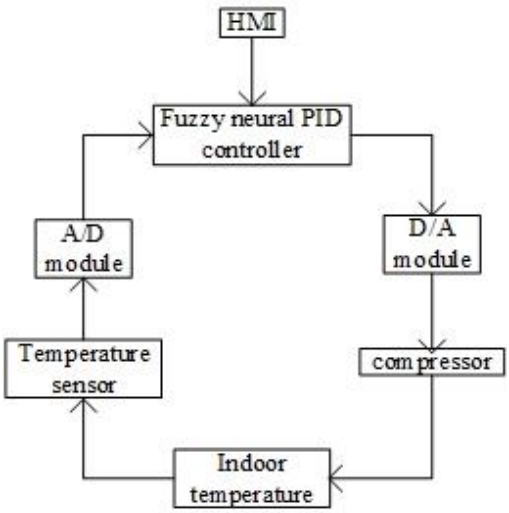


**Figure 3.** Temperature control

ISSN: 2414-1895 DOI: 10.6919/ICJE.202007_6(7).0004

### 2.2 Control system analysis

As shown in FIG. 3, the control system is mainly composed of temperature sensor, compressor, fuzzy neural PID controller, A/D module, D/A module and HMI (human-machine interaction interface).

### 2.3 Mathematical model of air conditioning temperature control

The corresponding mathematical model should be established in the air conditioning temperature control system. According to the characteristics of air conditioning temperature control system such as nonlinearity, constraint, pure hysteresis and large inertia, the first-order system with time delay is adopted. The basic mathematical model of air conditioner temperature control system transfer function is as follows:

$$G(s) = \frac{Y(s)}{X(s)} = K\frac{e^{-\tau s}}{1+Ts} \tag{1}$$

Where, Y(s) is the pull transformation of system output, X(s) is the Laplace transformation of system input, and K is the open-loop amplification factor. τ is lag time, T is the time constant.

For equation (1), the step response method is adopted to obtain the transfer function as follows:

$$G(s) = \frac{0.5e^{-2500s}}{1+280s} \tag{2}$$

According to equation (2), when the system lag time reaches 2500 seconds, if the traditional PID control is adopted, the PID action needs to go through 60s before it can be applied to the temperature control, and the steady-state error increases with the excessive overkill in the control system. Therefore, the problem of large time delay is the main problem to be solved.

## 3. Adaptive fuzzy neural PID controller

Fuzzy neural network integrates the strong knowledge expression ability of fuzzy logic and the strong learning ability of BP neural network [4]. Its basic system control structure is shown in FIG 4.

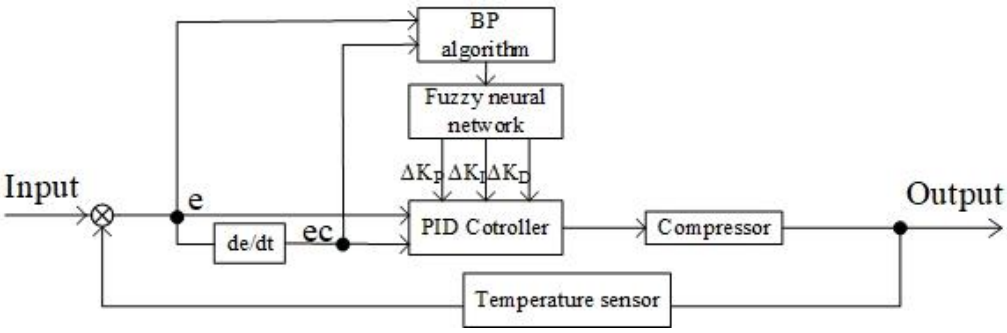


**Figure 4.** Adaptive fuzzy neural PID controller

### 3.1 Design of fuzzy controller

Fuzzy controller is the core of fuzzy control system. The fuzzy controller consists of four parts: subject fuzzification, knowledge base, fuzzy reasoning and defuzzification (or clarification). The block diagram of the fuzzy controller is shown in FIG. 5 [5].

#### 3.1.1 Fuzzification

Fuzzification is a process of making clear variables fuzzy. There are two fuzzy inputs for the whole controller: temperature control deviation e and deviation rate ec. Let the basic theoretical field of deviation e be [-60℃, 60℃] (increase the allowable range of basic error by 20 times). If the theoretical field X = {-6, -5... , 0,... , 5,6}, then the quantization factor can be:

$$K_e = \frac{1}{10} \tag{3}$$

Here, we use 7 language change values to describe, which are "positive big" (PB), "positive median (PM)", "positive small" (PS), "zero" (0), "negative small" (NS), "negative medium" (NM) and

ISSN: 2414-1895 DOI: 10.6919/ICJE.202007_6(7).0004

"negative big" (NB). Based on the selection principle of deviation e language variable, the field Y = {-6, -5... , 0,... , 5,6}, the language value of ec is [PB,PM,PS,0,NS,NM,NB].

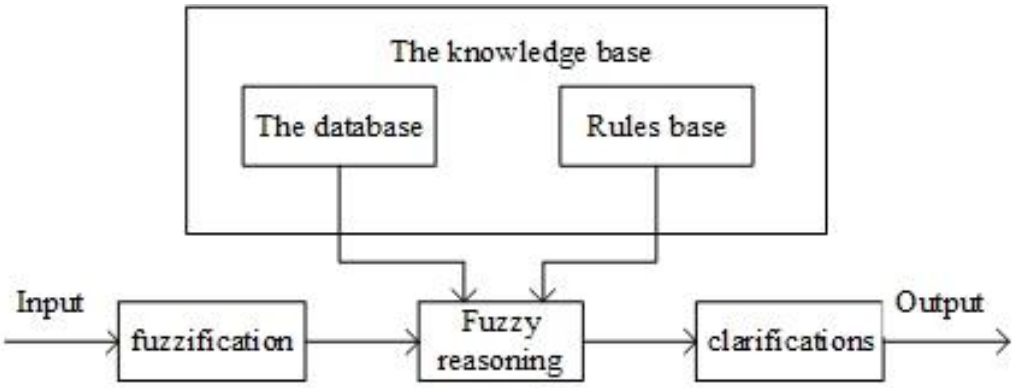


**Figure 5.** Composition of fuzzy controller

Based on the characteristics of temperature variability and instability in the process of temperature control, we adopted the gaussian membership function with good anti-interference ability [6].

### 3.1.2 Fuzzy reasoning

According to the data of air conditioning temperature control and operator experience, can be summed up the article 49 fuzzy statement composed of control rules (e and ec) and three output fuzzy controller ($\Delta K_P$, $\Delta K_I$ and $\Delta K_D$). The fuzzy rules are shown in Table 1, 2 and 3.

**Table 1**. Output $\Delta K_P$ fuzzy rules

| ec / e $\Delta K_P$ | NB | NM | NS | O | PS | PM | PB |
|---|---|---|---|---|---|---|---|
| NB | PB | PB | PM | PM | PS | O | O |
| NM | PB | PB | PM | PS | PS | O | NS |
| NS | PM | PM | PM | PS | O | NS | NS |
| O | PM | PS | PM | O | NS | NM | NM |
| PS | PS | PS | O | NS | NS | NM | NM |
| PM | PS | O | NS | NM | NM | NM | NB |
| PB | O | O | NM | NM | NM | NB | NB |

**Table 2**. Output $\Delta K_I$ fuzzy rules

| ec / e $\Delta K_P$ | NB | NM | NS | O | PS | PM | PB |
|---|---|---|---|---|---|---|---|
| NB | NB | NB | NM | NM | NS | O | O |
| NM | NB | NB | NM | NS | NS | O | O |
| NS | NB | NM | NS | NS | O | PS | PS |
| O | NM | NS | NM | O | PS | PM | PM |
| PS | NM | NS | O | PS | PS | PB | PB |
| PM | O | O | PS | PS | PM | PB | PB |
| PB | O | O | PS | PM | PM | PB | PB |

ISSN: 2414-1895 DOI: 10.6919/ICJE.202007_6(7).0004

**Table 3**. Output $\Delta K_D$ fuzzy rules

| e \ ec ($\Delta K_P$) | NB | NM | NS | O | PS | PM | PB |
|---|---|---|---|---|---|---|---|
| NB | PS | NS | NB | NB | NB | NM | PS |
| NM | PS | NS | NB | NM | NM | NS | O |
| NS | O | NS | NM | NM | NS | NS | O |
| O | NS | NS | O | NS | NS | NS | O |
| PS | O | O | O | O | O | O | O |
| PM | PB | NS | PS | PS | PS | PS | PB |
| PB | PB | PM | PM | PM | PS | PS | PB |

### 3.1.3 Defuzzification

Based on the implication relation and inference rules in fuzzy logic, the control quantity is obtained through fuzzy reasoning, and then it is transformed into the actual precise quantity for control through defuzzification [7]. In this paper， the qualitative method to blur, get output $\Delta K_P$, $\Delta K_I$ and $\Delta K_D$.

## 3.2 Fuzzy neural network structure

This paper combines the fuzzy controller with the neural network, and the PID controller can adjust the air conditioning temperature quickly and accurately. The structure diagram of the fuzzy neural network is shown in FIG. 6.

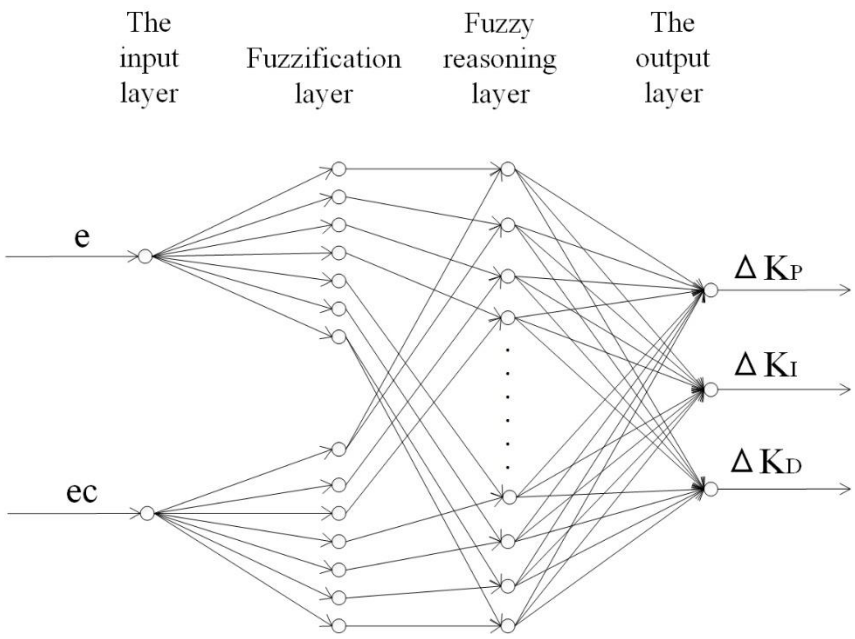


**Figure 6.** Fuzzy neural network structure

Input layer: import the temperature control deviation e and deviation rate ec into the network and pass them to the next layer. Let's $x_1 = e$， $x_2 = ec$.

$$O_1(i) = x_i \tag{4}$$

Where i is equal to 1,2.

Fuzzy layer: fuzzy the input variables, and calculate the corresponding membership function of the output variables and 7 language variables.

ISSN: 2414-1895 DOI: 10.6919/ICJE.202007_6(7).0004

$$O_2(i,\ j) = \exp\left[-\frac{\left(O_i - m_{ij}\right)^2}{{n_{ij}}^2}\right] \tag{5}$$

Where, $O_1$（$i$） is the input of the fuzzy layer, $O_2$（$i$，$j$） is the output of the fuzzy layer, $m_{ij}$ is the center of the membership function of the jth language variable value of the ith input variable, and $n_{ij}$ is the width of the membership function of the jth language variable value of the ith input variable. j = 1，2，3，4，5，6，7.

Fuzzy inference layer: each node in this layer represents a fuzzy rule [8].

$$O_3(i,\ j) = c_k = \frac{1}{2}\sum_{i=1}^{2} O_2(i,\ j) \tag{6}$$

Where, $O_2(i,\ j)$ is the input of the fuzzy inference layer, $O_3(i,\ j)$ is the output of the fuzzy inference layer, and $c_k$ is the applicability of each fuzzy rule. k = 1，2，3，…，48，49.

Output layer (layer or to blur) : the layer has three nodes, the output $\Delta K_P$、$\Delta K_I$ and $\Delta K_D$. In this layer, the center of gravity method is used to defuzzize to obtain three PID adjustable parameters of the controller [9].

$$O_4(a) = \frac{\sum_{k=1}^{49} v_k u_v(v_k)}{\sum_{k=1}^{49} u_v(v_k)} \tag{7}$$

Where, $O_4(a)$ is the output of the output layer, a = 1，2，3.

$$O_4(1) = \Delta K_P \tag{8}$$

$$O_4(2) = \Delta K_I \tag{9}$$

$$O_4(3) = \Delta K_D \tag{10}$$

### 3.3 BP algorithm

BP algorithm is used to optimize the weight between layers and the width and center of membership function.

$$E = \frac{1}{2}\sum_{n=1}^{3}(X_n - Y_n)^2 \tag{11}$$

Where $X_n$ is the actual output and $Y_n$ is the expected output. n =1，2，3.

Based on the strategy of gradient descent, the BP algorithm adjusts the parameters in the negative gradient direction of the target [10]. The updating formulas of $m_{ij}$、$n_{ij}$ and $v_k$ in BP algorithm:

$$\Delta m_{ij} = -\eta\frac{\partial E}{\partial m_{ij}} \tag{12}$$

$$\Delta n_{ij} = -\eta\frac{\partial E}{\partial n_{ij}} \tag{13}$$

$$\Delta v_k = -\eta\frac{\partial E}{\partial v_k} \tag{14}$$

The $\eta$ for the vector.

## 4. Modeling simulation and data visualization

This experimental simulation adopts the simulink simulation tool in Matlab.

Firstly, the conventional PID controller of air conditioning temperature is established, and its simulation structure is shown in FIG 7. Set the parameters in PID controller to: $K_P$=2, $K_I$=0.5, $K_D$=1.5.

ISSN: 2414-1895 DOI: 10.6919/ICJE.202007_6(7).0004

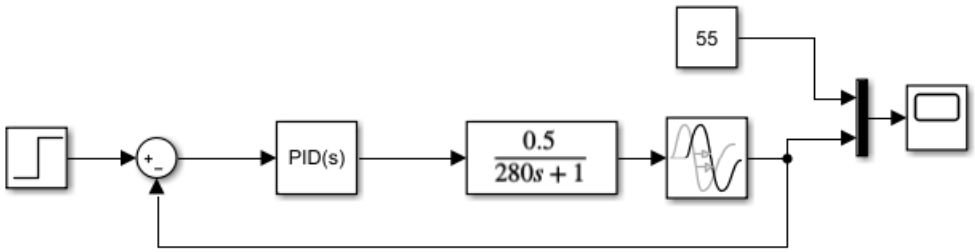


**Figure 7.** Simulation structure diagram of conventional PID controller

In the process of building the fuzzy PID controller, the fuzzy controller can be directly imported into simulink, and set the input and output of the domain, membership function and calculation rules. The simulation structure diagram is shown in FIG.8.

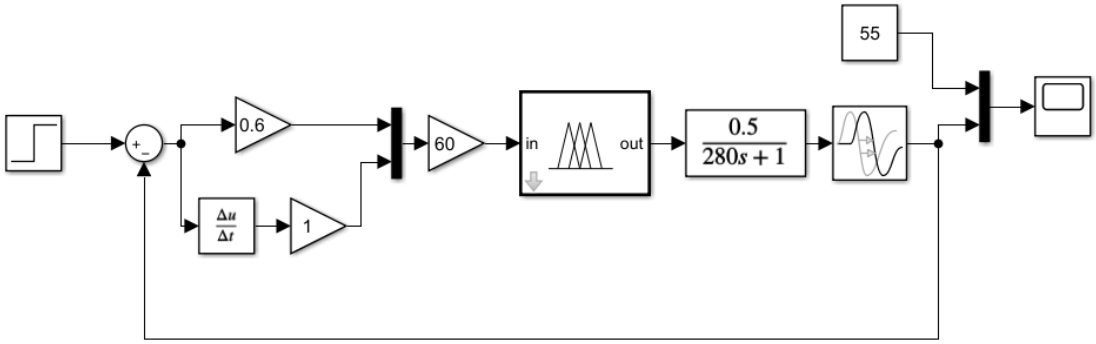


**Figure 8.** Simulation structure diagram of fuzzy PID controller

The control algorithm of the neural fuzzy PID controller is relatively complex, in which the neural fuzzy PID algorithm is represented by S-function module, and its structure is shown in FIG 9.

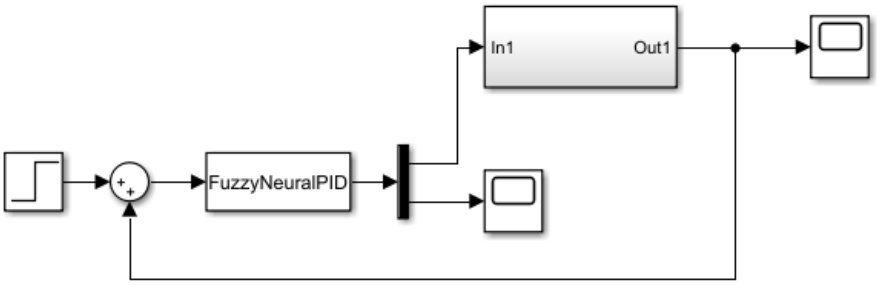


**Figure 9.** Neural fuzzy PID controller simulation structure diagram

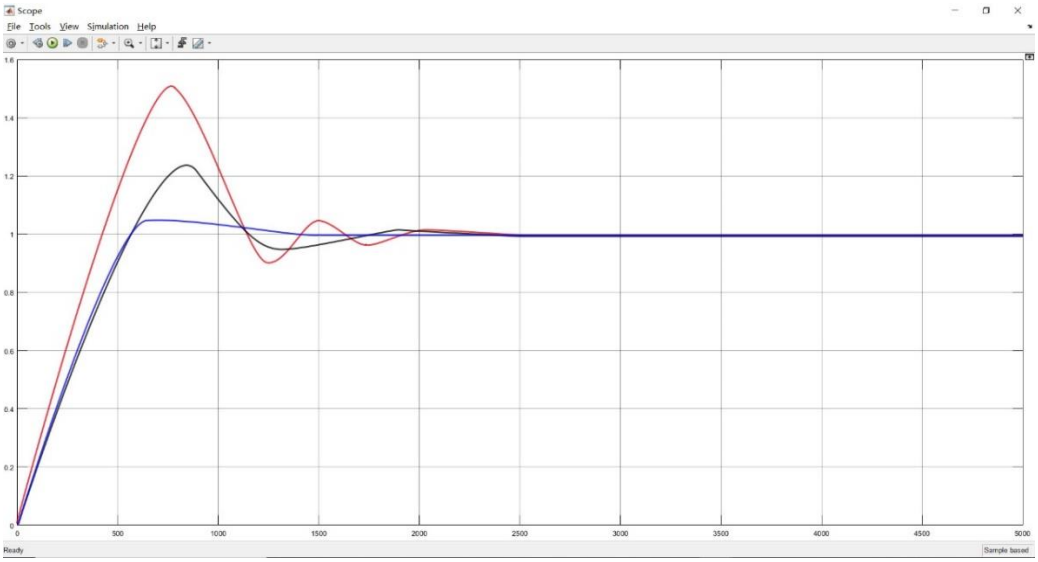


**Figure 10.** Control simulation results under step signal

ISSN: 2414-1895 DOI: 10.6919/ICJE.202007_6(7).0004

The simulation results are shown in FIG 10. The red line, black line and blue line curves correspond to the response curves of the traditional PID controller and the fuzzy PID controller under the step signal respectively. It can be seen from the shape of the curve that the control effect of the PID controller has been significantly improved after adding the fuzzy link to correct the parameters in real time. The overshooting and the time required for the system to reach stability have been improved, but the system adjustment time has increased by about 50% compared with the traditional PID controller. When fuzzy neural PID control is used, the overshoot of the system is close to zero, there is no vibration, the adjustment time is 500 s, the performance of the system has been greatly improved. Table 4-1 summarizes the performance indicators of the three controllers.

**Table 4**. Performance indexes of the three controllers

| The control mode | Adjustment time（s） | Overshoot amount |
|---|---|---|
| Traditional PID control | 2400 | 45％ |
| Fuzzy PID control | 2100 | 18％ |
| Fuzzy neural PID control | 1300 | 7％ |

## 5. Conclusion

This paper presents a fuzzy neural PID control algorithm, which is applied to control the speed of the compressor motor, so as to realize the temperature control of the air conditioning, so as to meet the requirements of the air conditioning temperature control system. The comparison of three groups of simulation results shows that:

(1) In terms of overshoot, when the traditional PID control is used, the overshoot reaches 45%; when the fuzzy PID control is used, the overshoot still reaches 18% although the overshoot decreases substantially; when the fuzzy neural PID control is used, the overshoot approaches 7%.

(2) In terms of whether there is any vibration, when using the traditional PID control, the vibration is obvious; when using the fuzzy PID control, the vibration is obviously weakened; when using the fuzzy neural PID control, the system has no vibration;

(3) On the robustness, when disturbed, when using the traditional PID control, slower convergence, fuzzy PID control, the convergence speed with small amplitude increase, when using a fuzzy neural PID control, the temperature is affected by external disturbances is small, good disturbance compensation and anti-interference ability, has made great improve robustness. To sum up, the fuzzy neural PID control algorithm is stable, fast and robust, which meets the requirements of various technical indexes of the air conditioning temperature control system and can achieve the purpose of air conditioning temperature control.

## References

[1] S H ZHAO，HAN X. Temperature control of curing machine based on fuzzy neural network PID. Journal of Tianjin Polytechnic University，2019，38（4）：83-88.（in Chinese）

[2] K X Cao K X, D H Yang. Air conditioning structure principle and maintenance. China Machine Press:Beijing,2010.(in Chinese)

[3] Y F Ding. Air conditioning cold and heat source Engineering. China Machine Press:Beijing,2019.(in Chinese)

[4] R J Zhou, L N Zhang. Fuzzy and Neural network design based on MATLAB and fuzzyTECH. Electronic industry manufacturing edition: Beijing,2010.(in Chinese)

[5] R S Na. Mathematics of Fuzzy System and Application. Tsinghua university press: Beijing,2017.(in Chinses)

ISSN: 2414-1895 DOI: 10.6919/ICJE.202007_6(7).0004

[6] X P Qiu, R X Sun, D Yu, D Yang. Method of establishing membership functions of car—following behavior based on fuzzy clustering. Application Research of Computers, 2016, 33 (7): 1952-1956.(in Chinese)

[7] Q Q Guo. Design of control system for ship dynamic positioning simulator based on fuzzy theory. SHIP SCIENCE AND TECHNOLOGY, 2018, 40(5A):76-78.(in Chinese)

[8] L C Fang, W P Huang. Comparative study on PID control system of fruit wine fermentation temperature based on MATLAB. Food & Machinery, 2014, 30（3）：83-86.(in Chinese)

[9] B Zhao. Research on Control System of Triboelectrostatic Beneficiation Equipment based on Fuzzy PID Control. Xuzhou: China University of Mining and Technology,2019,29-30.(in Chinese)

[10] Zhi-Hua ZHOU. Machine learning. Tsinghua university press: Beijing, 2016.(in Chinese)

[11] Tsai, C., Yu, C. & Tsai, C. Adaptive ORFWNN-Based Predictive PID Control. Int. J. Fuzzy Syst. 21, 1544–1559 (2019). https://doi.org/10.1007/s40815-019-00650-w.

[12] Fan B, Wu J, Niu J, Zhang A, Liu J. (2014) Application of Fuzzy Neural-PID Controller in the Static Inverter's Simulation. In: Wang W. (eds) Mechatronics and Automatic Control Systems. Lecture Notes in Electrical Engineering, vol 237. Springer, Cham.