ISSN: 2414-1895 DOI: 10.6919/ICJE.202007_6(7).0019

# Design of Public Garbage Can Overflow Alarm and Positioning System based on NB-IoT

Liang Yu*, Yi Wang, Meiling Deng and Xue Gong

College of Computer, Guangdong University of Science and Technology, Dongguan 523083, China.

## Abstract

**With the development of society and the evolution of modern cities, people pay more and more attention to public health and safety. At present, the management of municipal public health is still based on traditional manual experience, which requires a lot of human and material resources, making the management inefficient.In this paper, according to the existing problems of garbage collection in public garbage cans, as well as the development of Internet of things technology, long-distance wireless communication technology and cloud computing technology, a public garbage bin overflow alarm and positioning system based on NB-IoT is proposed.The perceived information of garbage cans is to be processed by the STM32F103C8T6 microcontroller. It can not only automatically open or close the garbage cans according to the human body's sense, but also detect the garbage overflow and positioning information,which can be transmitted to the Internet of things cloud platform through BC95 NB-IOT communication module.The alarm positioning information of the city's public garbage cans is pushed to the municipal management personnel and sanitation workers by the cloud platform, in order that remind them to handle in time.However,a large number of data are uploaded by the cloud platform,so as that can carry out data mining analysis and provide guidance for the location and density of the municipal departments to lay out public garbage cans.A new intelligent management mode is put forward in this system on urban public garbage can, which can improve the management efficiency, reduce the management cost, and realize the intelligent, network and information of urban public health.**

## Keywords

**Public garbage can, NB-IoT, Internet of things cloud platform, STM32F103C8T6, Data mining.**

## 1. Introduction

With the proposal of environmental protection slogan, the concept of garbage classification and information recycling is increasingly popular. The popularity of classified garbage can effectively help sanitation workers reduce workload, save working time and improve work efficiency. In addition, with the development of Internet of things technology, all things can be connected, resulting in the generation of intelligent trash cans and other related products, nevertheless, most of the products are only part of the intelligence, or local intelligence, but not the intelligence and informatization of the whole network anytime and anywhere[1].In 2005, the red outer sensing garbage can appeared, which has a good health guarantee. However, the overlap between the movement track of the lid and the area where the garbage enters the garbage can lead to the reduction of the effective garbage entering area in the structure. In 2006, the solar energy trash can appeared on the street in New York. It uses optical components to convert solar energy into electric energy for driving the system, and stores the

ISSN: 2414-1895 DOI: 10.6919/ICJE.202007_6(7).0019

extra energy in the battery. In addition, the garbage can be illuminated at night, and the city image can be improved by putting City advertisements.In 2012, CleanRobotics, a start-up company in Pittsburgh, USA, developed a full-automatic sorting bin called transhbot, which can control cameras, metal detectors, sensors, and motors to put garbage in specific and accurate places.It will automatically open the lid of the garbage can after it detects the close person through the sensor. The load sensor can sense the object thrown into the garbage can. The machine vision system and the metal detector will analyze whether the object is recyclable or buried, and use a simple movable door and dumping motor to put the garbage into the exact classification garbage can. In 2014, Enevo, based in Finland, used the Internet of things technology to monitor whether the garbage can is full in real time through the sensors placed on the top of the garbage can. At the same time, according to the analysis of big data, it calculated the best time and route to recycle the garbage in the full garbage can, saving a lot of resources for the municipal management department and garbage disposal company[2,3].In this paper, the wireless communication technology NB-IoT of low-power WAN is used to upload the real-time field information of public garbage cans to the cloud platform of the Internet of things. Through the powerful cloud platform data processing ability, it can forward the alarm location information of public garbage cans overflow and help the municipal management to optimize the layout of public garbage cans, so as to achieve efficient urban public health management.

## 2. The overall design of the system

Based on STM32F103C8T6 microcontroller, the public garbage bin overflow alarm and positioning system uses the infrared human body sensor installed on the bin surface to automatically identify the users who want to throw garbage, and automatically open the bin cover for the convenience of users. When users leave, the bin cover will also be delayed to close, so as to avoid the surrounding odor and fumes. In addition, the system installed three 60 ° ultrasonic sensors on the inner wall of the lid to detect whether the internal garbage is full, which can accurately judge whether the public garbage can be full in all directions. When the distance from the end of the bin to the garbage measured by ultrasonic is less than a certain set limit value, the public garbage bin is considered to be full. At this time, the main control chip STM32F103C8T6 of the system will send the information together with the GPS positioning information of the garbage bin to the cloud platform of the Internet of things through NB-IoT wireless long-distance communication technology[4].The Internet of things cloud platform processes the message in two ways. First, it forms the message queue and pushes it to the subscriber mobile terminal (the mobile terminal held by the sanitation workers or the smartphone running the relevant APP) of the message through MQTT protocol or COAP protocol, and reminds the relevant person in charge to collect garbage at the designated location in time. Secondly, the Internet of things cloud platform conducts data mining analysis on a large number of cloud information, so as to guide the municipal departments how to plan the layout of public garbage cans and the reasonable arrangement of personnel, which greatly optimizes the municipal work efficiency and saves a lot of human and material resources.

In addition, the system uses USB interface or STLink mode to download the program, 1602 LCD liquid crystal for local display, to remind users whether they can throw garbage into the trash can again, NB-IoT module is used to connect the Internet of things cloud platform wirelessly[5], so that the data can be updated to the cloud in real time, which is convenient for workers to view online or offline, convenient for their reasonable planning of garbage recycling lines, and improve work efficiency. The system uses solar panel and charging capacitor to supply power in coordination. Normally, solar panel is used to supply energy for the system, and charging capacitor is used as backup power supply to provide guarantee for long rainy days. Because the controller and communication technology used in the system are low-power, it can ensure the stable operation of the system. The overall design diagram of system control is shown in Figure 1.

ISSN: 2414-1895 DOI: 10.6919/ICJE.202007_6(7).0019

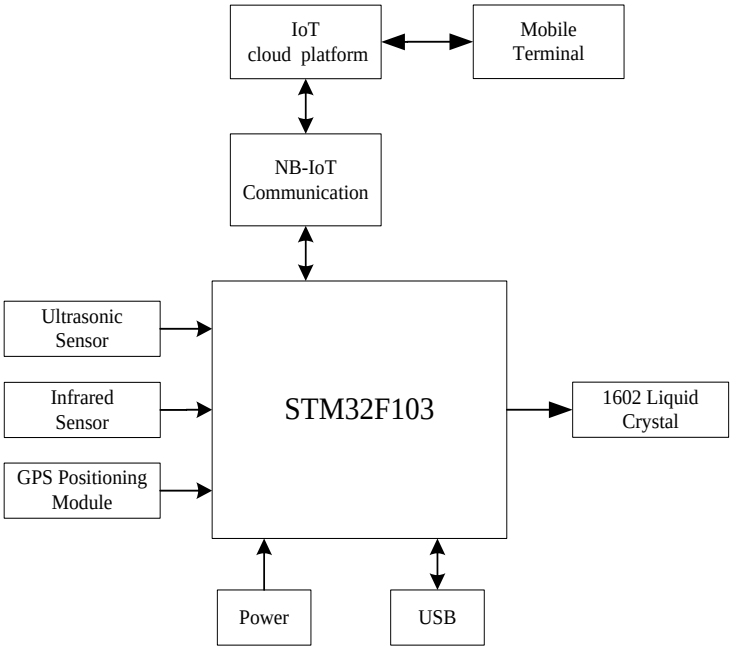


Figure 1 The overall design diagram of system control

## 2.1 Hardware circuit design of the system

The main controller of the system is STM32F103C8T6, which is a 32-bit microcontroller based on ARM Cortex-M3 core. 72mhz crystal oscillator clock is adopted. The system adopts 48 pin LQFP package [6]. The power supply voltage can be as low as 3V. It has 37 basic input / output pins. In addition, 10-channel 12 bit ADC converter, DMA control function, PWM drive function, high-capacity data memory RAM and program memory flash are integrated in the system; two modes of STlink download and USB Download are supported, and TX / RX serial port communication mode is supported, including three synchronous / asynchronous serial communication interfaces USART, $I^2C$, SPI communication, etc. The controller has the characteristics of powerful function, low price, simple and easy to use, so it is widely used in various embedded systems and intelligent control systems. The minimum system of the microcontroller STM32F103C8T6 is shown in Figure 2:

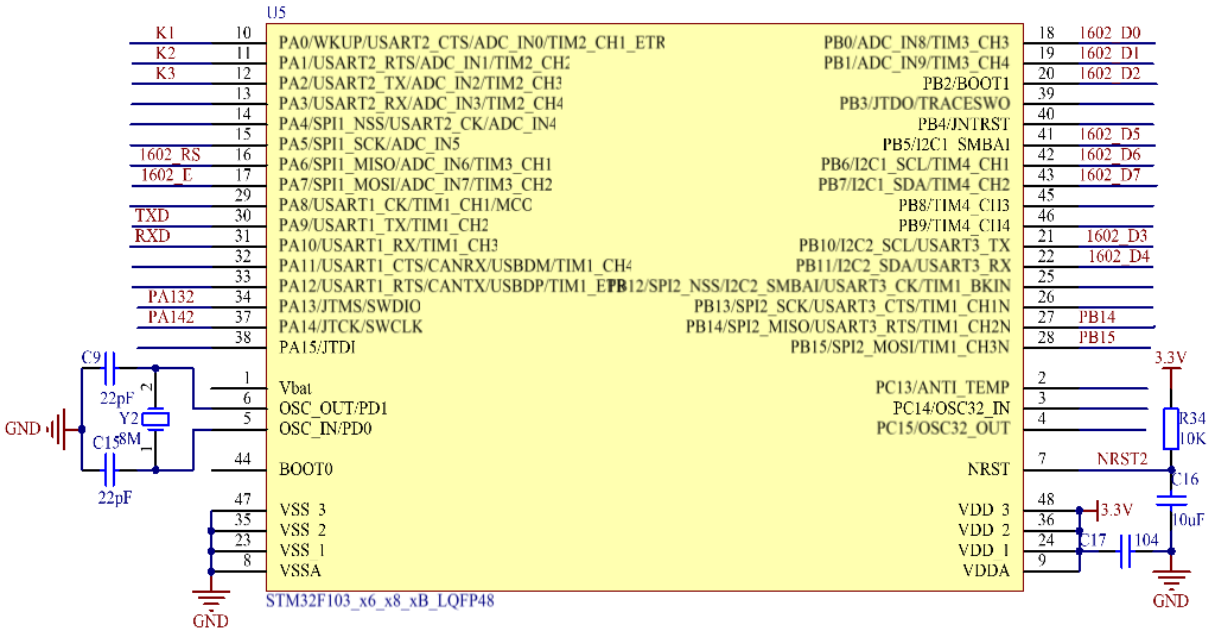


Figure 2 minimum system of microcontroller STM32F103C8T6

ISSN: 2414-1895 DOI: 10.6919/ICJE.202007_6(7).0019

## 1、Design of human body automatic induction circuit

At present, the garbage cans that can be seen everywhere in the public environment are either open type, which emits all kinds of pungent smell; or closed, but most people are reluctant to touch the lid of the garbage cans with their hands, and the garbage will be piled up around the garbage cans, so that the garbage cans will seriously affect the health status of the public environment. Therefore, it is very important to design an intelligent device to automatically open the lid of the public garbage can. The system is equipped with an infrared sensor on the surface of the public garbage can, which can automatically open the lid when the user is near the public garbage can. In addition, the lid can be closed after the user loses the garbage. The infrared sensor of the system adopts the integrated module U1 / GH-718, and the specific circuit diagram is shown in Figure 3. Once a user approaches, a high level will be detected at the end of PA132. According to this signal, the microcontroller controls the servo motor steering gear to rotate forward, so as to open the end of the barrel. When the user leaves, the low level will be delayed to output, so as to control the steering gear to reverse and close the end of the barrel [7].

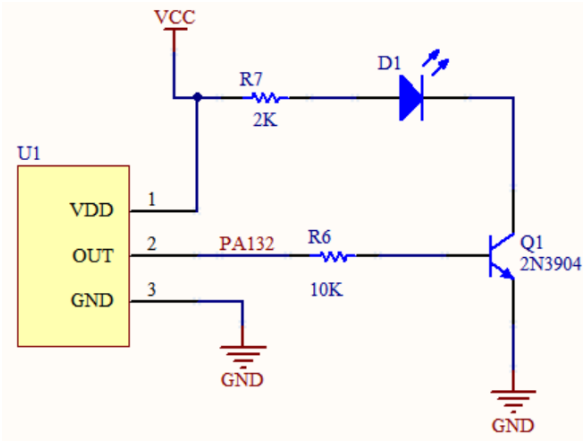


Figure 3 infrared detection circuit

## 2、Design of ultrasonic distance measuring circuit

The system uses the ultrasonic sensor to measure the distance from the garbage to the cover of the public garbage can according to the inner side of the cover, so as to judge whether the garbage in the public garbage can is full. If the public garbage can is full, it will be displayed on the 1602 LCD to remind users not to throw garbage into it. In addition, the information will also be uploaded to the Internet of things cloud platform through NB-IoT wireless communication technology, and the Internet of things cloud platform will forward the subscription message to the mobile terminal of environmental protection workers to remind them to clean up the garbage in time. In addition, in order to improve the accuracy of detection, the system uses three ultrasonic sensors of the same model to arrange the detection in the way of triangle, so that 360 degress without dead angle can accurately detect whether the garbage is really full, so as to avoid the situation that each garbage shape is long and thin, and the detection distance is less than the set limit value to remind the sanitation workers to clean up.

HC-SR04 is used as the ultrasonic distance measurement module of the system, which can provide the non-contact distance sensing function between 2 centimeter and 400 centimeter, with the ranging accuracy of up to 3 millimeter. The module mainly includes the ultrasonic transmitter, control circuit and receiver. The hardware circuit design of the system is shown in Figure 4. In this paper, we choose a circuit diagram of ultrasonic sensor ranging, the other two ultrasonic sensors ranging circuit diagram is the same, but the corresponding GPIO port is different. When the PA142 port of the microcontroller STM32F103 provides a high-level signal of more than ten microsecond, at this time, the trig pin of the ultrasonic sensor module is effective, and it is triggered to generate ultrasonic wave to spread out. When encountering obstacles, it will reflect back to receive the original ultrasonic signal. During this

ISSN: 2414-1895 DOI: 10.6919/ICJE.202007_6(7).0019

period of time, the echo pin of the ultrasonic sensor will change the level signal when receiving the reflected ultrasonic wave, so the distance between the garbage and the end can be simply obtained through the relevant mathematical calculation, and the automatic identification can be realized.

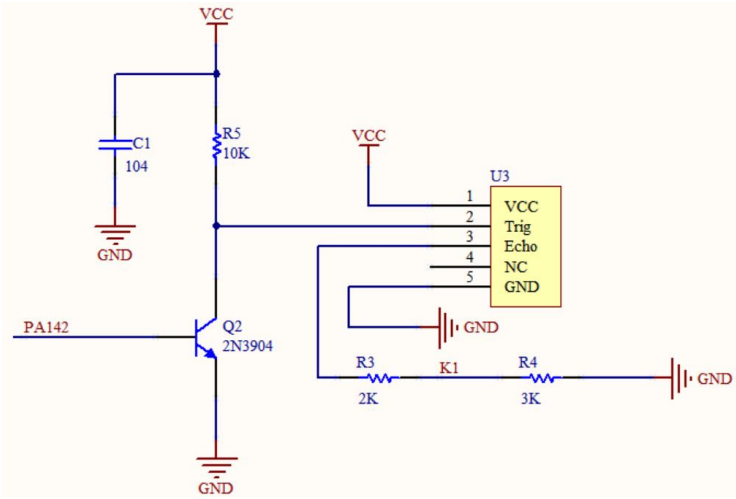


Fig. 4 ultrasonic sensor ranging detection circuit

## 3、The circuit design of GPS positioning information

A9G, namly a GPS positioning chip is used in the system, which is a complete four frequency GSM / GPRS module, 800 / 900 / 1800 / 1900MHz. It integrates GPRS and GPS / BDS technology, which greatly saves the time and cost for customers to develop GNSS applications. It is widely used in various Internet of things occasions. The system uses GPS technology to carry out real-time positioning for each public garbage can in the city, which has two main functions. First, when the public garbage can overflows, the sanitation workers not only get a reminder from the mobile terminal, but also know the location information of the public garbage can, which is convenient for workers to clean up the corresponding location and saves human and material resources. Secondly, the location information of public garbage cans in all parts of the city will be connected to the cloud through NB-IoT technology. This enables the Internet of things cloud platform to clearly know the frequent overflow and recycling of public garbage cans in those places of the city through big data analysis technology. It also shows that there is a large flow of people and a large amount of garbage here, which can guide our municipal departments to increase the layout density of public garbage cans here.A9G module which is used in the system uses serial interface TXD and RXD to connect with microcontroller STM32 to transmit positioning information of public garbage cans. The specific circuit schematic is shown in Figure 5.

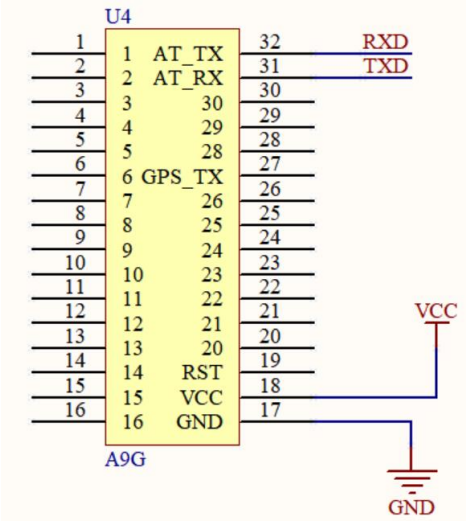


Figure 5 GPS positioning circuit

ISSN: 2414-1895 DOI: 10.6919/ICJE.202007_6(7).0019

## 4、1602 LCD display circuit design

Because the system only needs to set and display the number and letter information, i.e. the set limit value of the alarm reminder, the dynamic real-time display of the actual distance from the garbage in the public garbage can to the end, and the rolling highlight of the state "full" or "empty" of the public garbage can, it can be completed by using 1602 LCD. The system uses the general GPIO port of STM32F103 to enable, read and write control, data / command selection and a series of control strategies. The specific circuit design schematic diagram is shown in Figure 6.

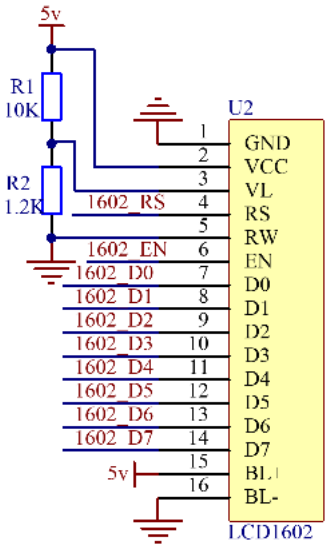


Figure 6 LCD1602 liquid crystal display circuit

## 5、Design of NB-IoT wireless communication module

The system uses BC95-B5 NB-IoT module of mobile communication company to realize wireless communication connection to the Internet of things cloud platform. BC95 is a high-performance, small size, long-distance, low-power NB-IoT wireless communication module, which is compatible with M35 module of mobile GSM / GPRS series, and convenient for customers to design and upgrade products quickly and flexibly. At present, BC95 module has been applied in many vertical fields, such as intelligent water meter, intelligent home, intelligent parking, intelligent street lamp, shared bicycle, intelligent smoke sensing, animal husbandry monitoring, etc. It uses the serial port TXD / RXD interface of microprocessor STM32F103 to connect the serial port of BC95-B5 module to NB-IoT communication mode. The system adopts the operating frequency band paid by the operator, and directly deducts the service charge of the customized NB-IoT card, which is simple and convenient, while ensuring the reliability of information transmission. In addition, at command is used to configure it into connect mode or low-power PSM mode or idle mode to realize simple cloud connection service. The circuit diagram of BC95-B5 NB-IoT module is shown in Figure 7.

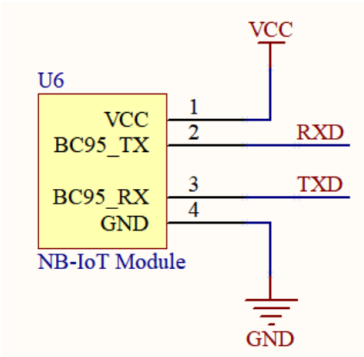


Figure 7 NB-IoT wireless communication module

ISSN: 2414-1895 DOI: 10.6919/ICJE.202007_6(7).0019

## 2.2 Software design of the system

The main process of system software design is shown in Figure 8, mainly including system initialization, ultrasonic sensor ranging, infrared sensor human body sensing, 1602LCD liquid crystal display, GPS positioning information detection and system control logic. When people want to use the public garbage can to throw things, only when the public garbage can is not full, the human body induction device will trigger to open the garbage can automatically, otherwise, it will not open automatically.

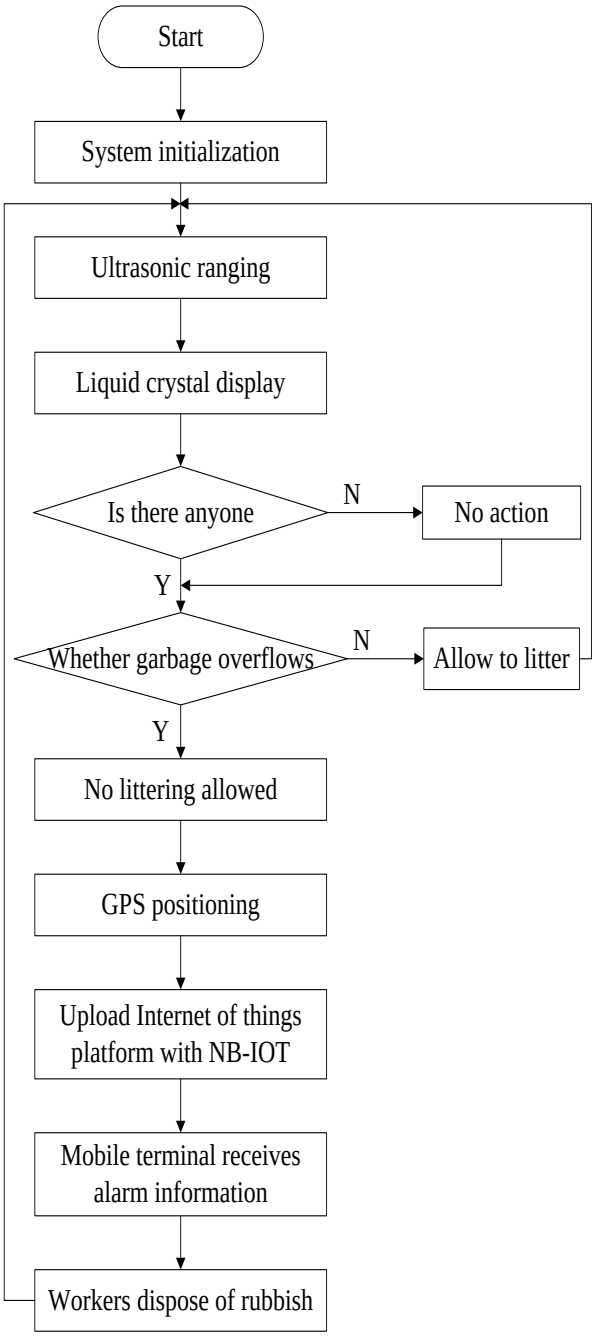


Figure 8 main flow chart of the system

At the same time, people can know the information that the garbage can is full through the LCD display. After the garbage enters the garbage can, the concrete from the top of the garbage to the end of the garbage can be updated in real time through the ultrasonic sensor distance measurement and displayed on the LCD screen. When the public garbage can is full and overflows, the microcontroller STM32 will wake up the NB-IoT communication module and upload the full information together with GPS positioning information to the Internet of things cloud platform. On the one hand, it is

ISSN: 2414-1895 DOI: 10.6919/ICJE.202007_6(7).0019

stored for data analysis[8], on the other hand, it is pushed to the relevant person in charge. The public health director of the city can know the garbage status of the public garbage cans in all places of the city anytime and anywhere, which is convenient for the reasonable planning and removal of the recycling arrangement. In this way, the use of Internet of things combined municipal public health can greatly save human and material resources, alleviate the shortcomings of public health safety, and improve work efficiency.

## 1. Program design of overflow detection of public garbage cans

In the system, the overflow detection of the public garbage can is completed by three ultrasonic sensors installed at 60 degress to each other. The real-time distance measurement is based on the reflection characteristics of the ultrasonic wave. The basic principle is shown in formula (1):

$$s = v \times t / 2 \tag{1}$$

Where, in formula (1), $s$ is the distance from the end of the public garbage can to the top of the garbage, $v$ is the propagation speed of the ultrasonic wave in the air at room temperature, 340 meters per second can be taken, $t$ is the duration of the high level of the echo end of the ultrasonic sensor, which can be obtained by the timer interruption of the STM32 microcontroller.

In addition, in order to ensure that the ultrasonic sensor can alarm accurately and comprehensively, three 60 degress ultrasonic sensors are used to measure the distance at the same time. Only when the distance measured by the three sensors is less than the distance threshold by 10 centimeter at the same time, the public garbage can full overflow alarm information will be uploaded to the Internet of things cloud platform. In this way, sanitation workers can receive the alarm information pushed by the cloud through the mobile terminal, and can reasonably arrange to deal with the public garbage there.

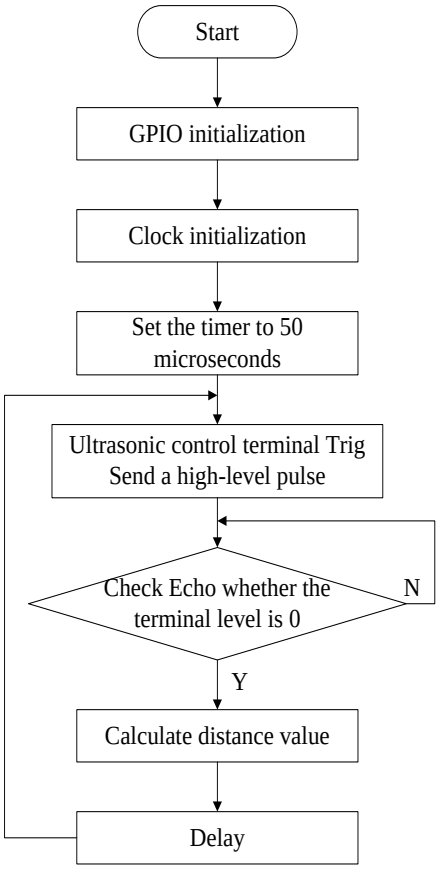


Figure 9 flow chart of overflow detection of public garbage cans

## 2. Program design of infrared automatic induction of human body

The flow chart of the system's infrared automatic sensing function is shown in Figure 10. When someone is near the public garbage can, the infrared sensor on the can surface can detect the

ISSN: 2414-1895 DOI: 10.6919/ICJE.202007_6(7).0019

corresponding signal, and transmit its information to the microcontroller through the I / O interface. At the same time, when the microcontroller STM32 detects that the trash can is not full, it sends the control information to drive the steering gear to rotate forward and open the lid of the trash can for the convenience of the user. When the user leaves after dumping the garbage, the controller will send the control information to drive the steering gear to delay inversion and close the end of the bin, so that the 1602 LCD can display the current garbage storage status. In addition, as long as the above situation is not satisfied, i.e. no one is near or the garbage can is full, the lid of the public garbage can will not be opened automatically.

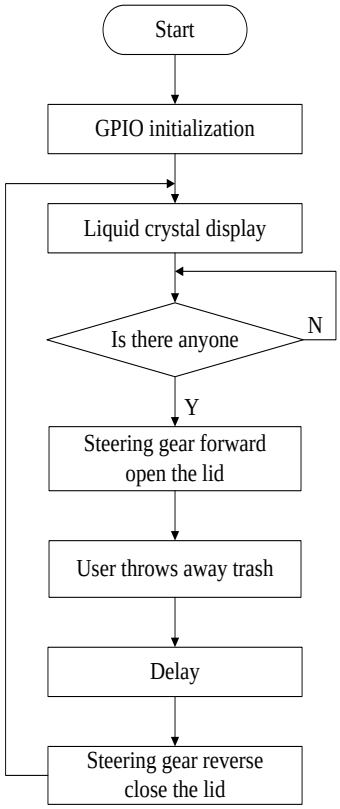


Figure 10 flow chart of human automatic induction

## 3. Conclusion

In this paper, a design scheme of public garbage bin overflow alarm positioning system based on NB-IoT communication technology is proposed. The garbage bin has the functions of automatic opening and closing according to human body induction, full bin alarm, LCD display, GPS positioning, cloud sensing and analysis, remote monitoring, etc. It can not only alleviate the public health safety, but also effectively monitor the public garbage cans in the city. In order to improve the intelligent management level of municipal public health, reduce the management burden, and effectively help the sanitation workers to reduce the workload, save the working time and improve the working efficiency. In addition, NB-IoT is a long-distance, low-power, low-cost communication technology, which makes the transformation of the system to the intelligent, network and information management of public garbage cans cheap and practical, with high social and economic benefits.

## Acknowledgements

This work was supported by the Guangdong University of Science and Technology General Characteristic project under Grant No. GKY-2019KYYB-31.

This work was supported by the Guangdong Youth Characteristic project under Grant No. 2019KQNCX227.

ISSN: 2414-1895 DOI: 10.6919/ICJE.202007_6(7).0019

## References

[1] Xiaoyun Wu,Jia Xu.Public intelligent trash can based on Internet of things[J].System simulation technology,Vol.14(2018) No.3,p.227-230.

[2] Haixiang Ju, Dongyan Fan. Design of Intelligent Garbage Bin System in Public Places[J]. Shanxi Electronic Technology,Vol.17(2017) No.6,p.28-31.

[3] Linan Fan, Zhiqiang Bai. Design of Intelligent Trash Can System Based on Single Chip Computer[J]. Instrument user,(2008) No.6,p.16-17.

[4] Juan Huan,Hui Li,Fan Wu,Weijian Cao. Design of water quality monitoring system for aquaculture ponds based on NB-IoT[J]. Elsevier B. V, Vol.90(2020),p.43-45.

[5] zhengfen Sun,Yinggang Xie,Zheng Yang, aofei Zhang. Urban well cover monitoring and management based on NB-IoT[J]. Internet of things technology,Vol.10(2020) No.4,p.103-105.

[6] Jinde Hu. Design of infrared remote control decoding system based on STM32F103C8T6[J]. SCM and embedded system,Vol.19(2019) No.10,p.78-81+85.

[7] Shupeng Liu,Xuetao Wang,Yuemei Li,Taihao Li,Caya Pi,Na Chen,Zhenyi Chen.Design and implementation of distributed temperature sensing carbon fiber intelligent mattress based on STM32F103C8T6[J].industrial control computer,Vol.32(2019) No.7,p.130-131.

[8] Abbas Rezaianzadeh, Maryam Dastoorpoor, Majid Sanaei,Cirruse Salehnasab,Mohammad Javad Mohammadi, Ali Mousavizadeh. Predictors of length of stay in the coronary care unit in patient with acute coronary syndrome based on data mining methods[J]. Elsevier, a division of RELX India, Pvt. Ltd, Vol.8(2020) No.2.