ISSN: 2414-1895 DOI: 10.6919/ICJE.202005_6(5).0002

# Finite Element Analysis of the Strength of Heavy-duty Mining Roller Bearings

Siyuan Liu, Bin Li

School of Southwest Petroleum University, Southwest Petroleum University University, Sichuan 610500, China.

## Abstract

**Mining roller cones bit are generally subject to large loads. The causes of failure include tooth failure and bearing system failure. Tooth failure includes tooth loss, fracture, and wear. Bearing failure is the main cause of mining roller bit failure. More than% of the failures are caused by the failure of the bearing system. The main failure forms are: plastic deformation of the bearing surface, fatigue damage, wear, roller jam, etc. The bearing system has a very low life under huge weight-on-bit and torque. Therefore, this paper analyzes the roller cone bit bearing system under heavy load conditions to obtain its stress distribution.**

## Keywords

**Cone bit; Bearing system; Mises stress; FOS.**

## 1. Introduction

The main reason for the life of mining roller bit is the large load. 80% of the failure of the roller bit is caused by the failure of the bearing system [1]. Therefore, this paper mainly studies the bearing system of mining roller bit.

In this paper, 97 / 8-inch mining roller bit is used as the research object to calculate and distribute the load of the bearing system. By establishing a three-dimensional model and a finite element model for strength simulation analysis, the stress distribution of the bearing system is obtained, and the maximum Mises stress and the maximum contact stress are obtained. Fatigue strength analysis was performed through the finite element results of structural strength to find the vulnerable parts of the bearing system.

The heavy-duty mining roller cone drill bit studied in this paper is N = 40 t, the rotation speed is n = 70r / min, the large end radius of the roller is r = 80mm, the inclination angle β = 54 °, and the hole bottom angle α = 8 °, Cone angle 2φ = 88 °, the number of large rollers is 18. The teeth of the main ring gear are evenly distributed on the axis of the big end of the cone.

## 2. Structural strength analysis of bearing system

### 2.1 Load calculation

According to the study of Liu Chaoxian [1] of Jiangxi Institute of Metallurgy in 1985, the mining roller bit that is generally "not over-topped and does not move the axis" is used as the research object, and the acceleration of the roller bit along its drawing line direction and the ground teeth are analyzed and derived. Expressions of kinematic parameters such as sliding speed and impact speed of teeth on the bottom of the hole are closer to the actual working conditions.

$$P_{max} = 1.28\left(\frac{1-\mu_1^2}{E_1}+\frac{1-\mu_2^2}{E_2}\right)^{-\frac{2}{5}}\left(\frac{m_1 m_2}{m_1+m_2}\right)^{\frac{3}{5}}\left(\frac{R_1 R_2}{R_1+R_2}\right)^{\frac{1}{5}} V^{\frac{6}{5}}$$

ISSN: 2414-1895 DOI: 10.6919/ICJE.202005_6(5).0002

The maximum impact force plus weight-on-bit is the load of the cone drill bit under extreme conditions. The force is resolved to the radial and axial directions of the bearing. The force is distributed to the bearing thrust surface. The calculation of torque is as follows:

$$M = \int_0^{2\pi} \int_{r_1}^{r_2} f \cdot P_s dr d\theta$$

## 2.2 Finite element model

A three-dimensional model of the roller cone bit is established by CREO, as shown in Fig 1. The 3D model model is set to the step format with higher accuracy, and then imported into the ABAQUS finite element software. The tooth claw material widely used in mining roller bits is 20CrNiMo, the rolling body material is 55SiMoVa, and the roller material is 20Ni4Mo.

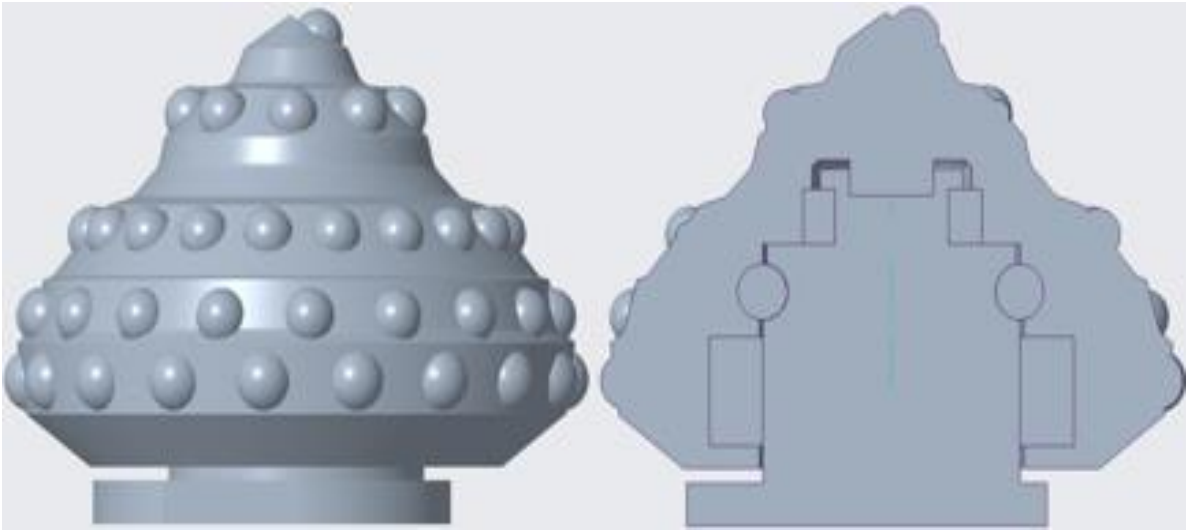

Fig. 1 Drill assembly model

Among them, the mechanical performance parameters of the tooth claw and roller material are provided by Gem Machinery Chengdu Manufacturing Branch. Roller material 55SiMoVa belongs to impact-resistant tool steel. After heat treatment, it has very high tensile strength and yield strength. It has the characteristics of high hardness, high wear resistance and high fatigue strength. This makes the material suitable for heavy-duty mining roller cones. [2] Is widely used in bearing rollers. The constitutive relationship of all materials is shown in Table 1.

Table 1 Three Scheme comparing

| Numble | Material | Elastic Modulus | Poisson's ratio | Yield Strength | tensile strength | Density |
|---|---|---|---|---|---|---|
| 1 | 20CrNiMo | 208 GPa | 0.295 | 785MPa | 980 MPa | 7870 kg/m$^3$ |
| 2 | 55SiMoVa | 218 GPa | 0.29 | 1922 MPa | 2334 MPa | 7800 kg/m$^3$ |
| 3 | 20Ni4Mo | 210 GPa | 0.286 | 1035 MPa | 1423 MPa | 7850 kg/m$^3$ |

## 2.3 Finite element results for bearing systems

The structural strength analysis of the roller bit bearing is mainly based on the Von.Mises yield criterion, and the contact stress reflects the wear resistance of the bearing. In other words, Mises stress is used as the evaluation index of strength, and contact stress is used as the evaluation index of fatigue. The bearing system was simulated and analyzed under the extreme working conditions of the maximum impact load occurring during the drilling of the roller cone bit, and the Mises stress and contact stress cloud diagram of the tooth claw shaft is shown in Fig 2.

ISSN: 2414-1895 DOI: 10.6919/ICJE.202005_6(5).0002

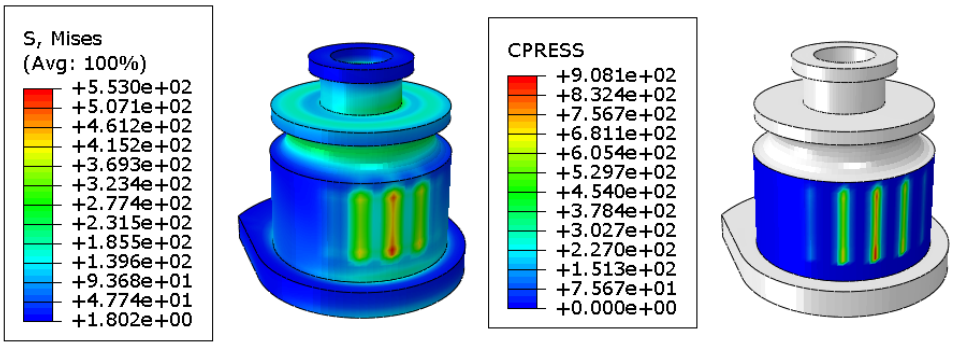


Fig. 2 Claw stress cloud diagram

It can be seen from the figure that the Mises stress of the roller cone reacts on the contact surface between the large journal and the roller, the root of the large journal, the root of the small journal, the thrust surface, and the ball groove. The most important thing is that it is concentrated on the large journal. Contact line with roller. The maximum Mises stress appears on the roller contact surface in the direction of radial force with a maximum value of 553 MPa; the maximum contact stress is 908.1 MPa, which also occurs on the roller contact surface in the direction of radial force.

The Mises stress of the roller is shown in Fig 3.

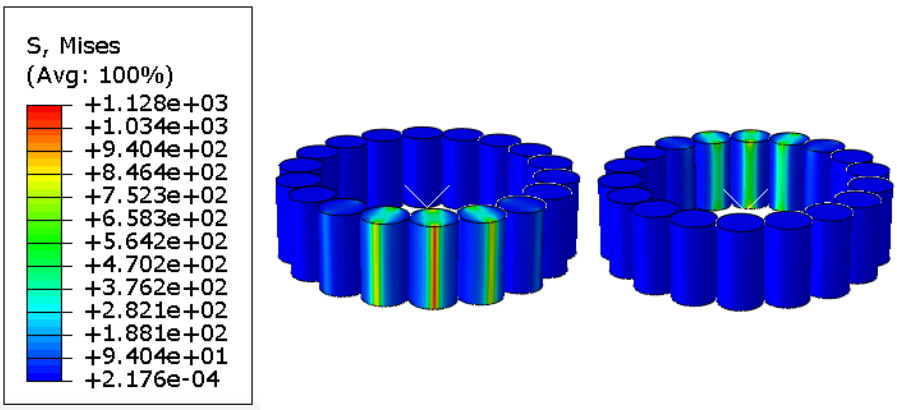


Fig. 3 Rolling body Mises stress cloud diagram

Only 7 of the 18 rollers bear the load, and the bearing area is less than 180 °. Mises stress is mainly concentrated where the rollers contact the rollers and bearings, and are larger at the end faces and sides. The maximum value appears on the inner contact surface of the roller in the radial load direction and is 1128 MPa. The load gradually decreases towards both sides.

The maximum stress of the roller under load is shown in Fig 4.

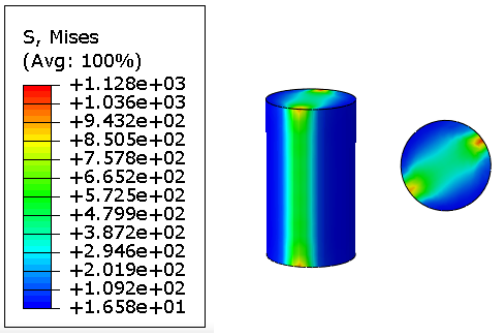


Fig. 4 Stress cloud diagram of the maximum bearing roller

The yield strengths of the bearing material and the roller material are 785 MPa and 1922 MPa, respectively. The analysis results indicate that the peak Mises stress of the pawl axis is 553 MPa, and the peak Mises stress of the roller is 1128 MPa. None of them has reached the yield limit and is in an elastic state, and no plastic deformation has occurred. Generally speaking, if the contact stress is too

ISSN: 2414-1895 DOI: 10.6919/ICJE.202005_6(5).0002

large, you can improve the size and number of rolling elements. For parts that are not in contact with the roller, consider surfacing wear-resistant alloys. For excessive Mises stress, it is mainly applied to the bearing structure. Improve. The mises stress of the roller is the largest at the joint of the end face and the side. The shape of the roller can be adjusted appropriately, such as rounding to improve the mises stress distribution.

## 3. Fatigue Strength Analysis of Bearing System

### 3.1 Fatigue Analysis Basics

For mining roller bit bearing systems, the high number of cycles and low stress levels belong to the category of high cycle fatigue. Therefore, we use the nominal stress method for calculation. The nominal stress method uses the stress and stress concentration coefficients as parameters, describes the fatigue characteristics of materials with the S-N curve of the material or component, and calculates the fatigue life using the cumulative fatigue damage theory according to the S-N curve of the component based on the nominal stress and stress concentration coefficient of the component. . When the stress on the part is higher than the fatigue limit, each load cycle will cause a certain amount of damage to the part, and this damage can be accumulated. When damage accumulates to the critical point, fatigue damage will occur to the part.

### 3.2 Finite Element Analysis of Bearing System

Based on the ABAQUS analysis of the structural strength of the bearing system, the Mises stress is used as the stress amplitude of the fatigue analysis. The fatigue strength of the bearing system is analyzed by the fatigue software Fe-safe, and the fatigue life of the structure is used as the evaluation index. In the analysis results, the fatigue life LIFE value is the number of cycles of fatigue failure of the component under alternating load. The safety factor FOS @ LIFE is a description of the safety status of the component's vulnerable parts under the specified number of cycles, and the result is the ratio of the finite element fatigue life result to the estimated fatigue life. Generally, 1 is used as the evaluation standard. When FOS @ LIFE is greater than 1, the calculated fatigue life is greater than the expected life, which is safer under the current number of cycles. When FOS @ LIFE is less than 1, the fatigue life is calculated The result is less than the expected life and will fail at the current number of cycles. However, this value is not constant. Under different design requirements or components with different working properties, this index will be slightly different, sometimes 1.1, 1.2, 1.3, etc. Here we choose 1 as the measure of FOS @ LIFE value by default.

Generally, the default life limit of steel is 10^7 times. When it exceeds 10^7 times, it is regarded as infinite life. This is also an index for infinite life design. The mining roller bit bearing system is not infinite life in actual work, so the fatigue of this article. The analysis was performed with the number of cycles of 10^6 times to study the stress safety factor FOS at the number of cycles and the number of cycles at the time of failure under this load.

The FOS cloud diagram of the safety coefficient of the tooth claw when the number of cycles is 10^6 is calculated by software, as shown in Fig 5.

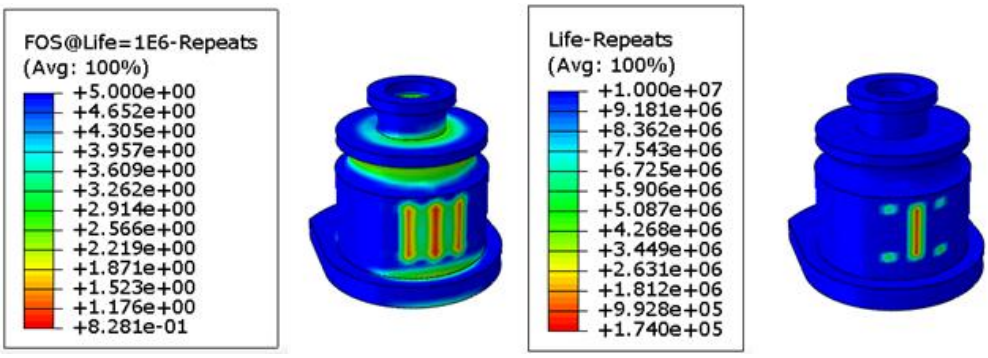


Fig. 5 Claw fatigue strength cloud map

ISSN: 2414-1895 DOI: 10.6919/ICJE.202005_6(5).0002

It can be known from the cloud diagram that the dangerous area is mainly concentrated on the contact line with the roller, and the contact area with the roller on the load application line is the most dangerous, which is also because the tooth claw is most loaded here. The minimum value of the fatigue safety factor FOS @ LIFE in this region is 0.8281. When the FOS value is less than 1, it means that the fatigue failure has occurred in this part after less than 1E6 cycles of alternating stress. The first place to fail is the area on the maximum load contact line. The minimum number of cycles is 1.74 × 10^5. At this time, a crack may occur there. Although the crack occurs, the tooth claw can continue to work normally. As the number of cycles continues to increase, the cracks gradually expand until further damage occurs, such as pitting and peeling of the surface of the material, causing the bearing system to fail to work properly.

Fig 6 shows the FOS cloud diagram of the roller when the number of cycles is 10^6.

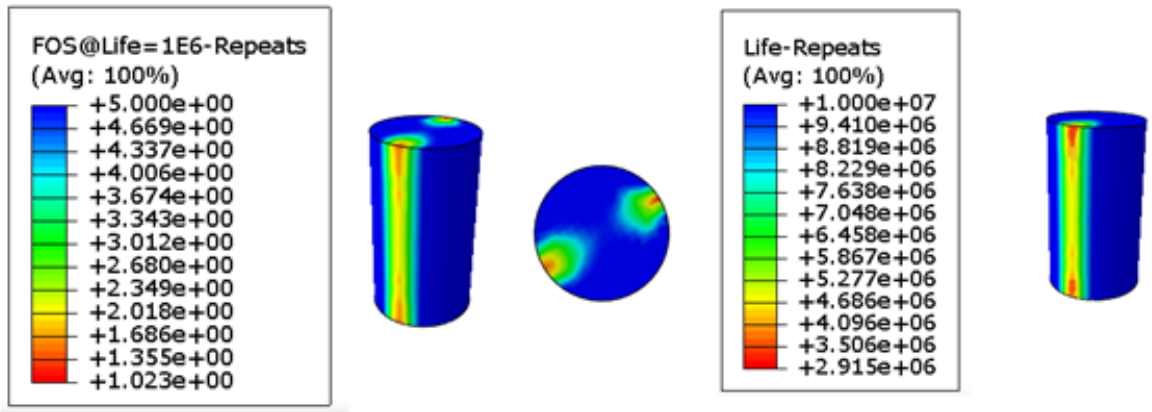


Fig. 6 Roller fatigue strength cloud

The cloud diagram results show that compared to the tooth claw, the safety factor FOS of the roller is slightly higher, the lowest is 1.023, appearing in the area of the contact line. This also shows that it is safer under the alternating stress cycle of 1E6 times, and the number of fatigue failures should be greater than 1E6 times. The most prone to failure of the roller is the lower half of the contact line area. The number of cycles of failure under this load is 2.915 × 106.

## 4. Summary

This paper studies the mining roller bit, analyzes the stress distribution of the bearing system under heavy load, and finds its dangerous area as the journal root and the contact line with the roller. Both the jaws and rollers under the impact load limit conditions meet the material's yield limit. Through fatigue analysis, it was found that the vulnerable parts of the jaws and rollers are basically consistent with the stress distribution, and the life of the rollers is longer than that of the jaws. Therefore, the failure of the jaws is the main reason for the failure of the roller bit.

## References

[1] Zhengmo Liu. Approaches to Improve Bearing Life of Mining Roller Bits [J]. Mining Machinery, 1989 (12): 10-15.

[2] Chaoxian Liu. Research on Kinematics of Roller Bits [J]. Mining Machinery, 1985 (10): 1-12

[3] [3]. Zhongyu Wang, Tao Jiang, Xin Chen, Ruxiao Zhang. Study on Performance of 55SiMoVA Steel for Roller Body of Roller Bit [J]. Mining Machinery, 1979 (04): 60-68.