International Core Journal of Engineering
Volume 6 Issue 4, 2020
ISSN: 2414-1895
DOI: 10.6919/ICJE.202004_6(4).0009

Design of Automatic Transplanting Machine of Plug Seedling for Greenhouse

Guanlong Huang[1,*], Qizhi Yang[2]

[1] Key Laboratory of Modern Agricultural Equipment's and Technology, Ministry of Education, Jiangsu University, Zhenjiang, China

*huangguanlong_ujs@163.com, qzyrobot@126.com

Abstract

The vegetable production in China is dominated by plastic greenhouses and small and medium-sized arch greenhouses. Due to the size limitations of shoulder height and ridge height, and poor ventilation, the common field transplanting machine are difficult to meet the transplanting requirements. According to the requirements of vegetable transplanting in greenhouse, a small wireless remote-controlled fully-automatic transplanting machine was designed, which can be used for quick transplanting of greenhouse seedlings, driven by pure electric power, pollution-free and compact. It mainly includes the seedlings tray carrier unit, seedling extraction unit, seedling separation unit, the machine chassis, and the control system. The transplanting qualified rate of transplanting machine under different transplanting frequency was determined by the simulated planting experiment. The results show that the qualified rate decreased with the increase of planting frequency. When the planting frequency was 60 plants / min / row, the qualified rate was 94.4%. It shows that the main parts of the transplanting machine designed in this paper coordinated in motion and stable operation, which meets the transplanting requirements of seedlings in dry land.

Keywords

Fully-automatic transplanting machine; Vegetable seedlings; Electric drive; Driverless.

1. Introduction

The greenhouse vegetable production in China has always been dominated by small and medium-sized greenhouse seedlings transplanting [1][2]. Plastic greenhouse and small and medium arch shed are widely used for vegetable transplanting. The shoulder height of the plastic shed is 1-1.8m, and the ridge height is 1.8m-3.2m. The height of the middle and small arch shed shoulder is 1.2-1.5m, and the height of the ridge is 1.6-2.5m [3]. Due to the size limitation of shoulder height and ridge height, it is difficult to use field transplanting machinery directly in such facilities. And the existing transplanting machine of vegetable plug seedling is mainly driven by internal combustion engine. Even if its size is small, it is easy to cause air pollution and affect the quality of vegetables when it works in small and medium-sized facility agriculture [4]. At present, there is no fully-automatic transplanting machine for small and medium-sized facilities in China, so it is urgent to invent a small fully-automatic vegetable transplanter to reduce human and material resources to improve the production efficiency.

The transplanting technique of vegetable plug seedling was primarily studied in the United States and Japan [5]. During 1920s and 1930s hand-feeding transplanting machines emerged in the horticulture sector; In 1950s, a variety of semi-automatic vegetable transplanting machines with different structures were developed while in 1980s semi-automatic transplanting technology was abundantly

ISSN: 2414-1895 DOI: 10.6919/ICJE.202004_6(4).0009

established [6]. At present, the more mature transplanting machine abroad is RTME110 semi-automatic vegetable transplanter developed by American Renaldo Company, which has a unique plastic film burning system and water injection system, and can adjust the plant spacing, row spacing and planting depth to adapt to different types of seedlings [7]; the Model 4000 transplanter developed by Michigan Company of the Netherlands adopts a seedling guiding pipe transplanter, which has a wide applicability and high efficiency [8]; The PZB83HD vegetable transplanter of Dongfeng-Iseki company of Japan uses diesel engine as power source, the plant spacing is 12-16.5cm adjustable, and it has fertilization parts and land preparation parts [9].

Academics in China are also in progress to realize the commercial value and advantages of automatic transplanting machine; therefore, the researchers of different fields are working together to develop an efficient automatic transplanting machine [10][11]. Han designed an automatic feeding system for a pot tray seedling transplanting machine in 2013, he innovatively designed the mechanism which can carry out the step displacement of the tray and the pressure plate rod which can prevent the soft tray from falling off. All the driving parts in the whole system were driven by pneumatic pressure [12]. Hu developed a two-line fully-automatic transplanting machine for vegetable seedlings in pots and pans in 2017. It was well appreciated the fully-automatic functions of seedling supply, seedling collection, seedling separation and seedling transplanting process [13]. Yu developed an automatic transplanting machine for vegetable seedlings in dryland in 2018. The machine can automatically complete the transplanting process of seedlings in pots, such as sending, picking, planting and covering soil [14]. Yang proposed a linear reciprocating mobile seedling separation mechanism, which adopted the gear and rack mechanism to accomplish the function of static seedlings throwing and receiving in 2018 [15].

It can be seen from the research on the development of automatic vegetable transplanting machine that the current automatic vegetable transplanters are larger in size and driven by people, most of which are driven by internal combustion engine. If it is used in small and medium-sized facility agriculture with narrow space and poor ventilation, the size can not meet the needs of existing low facility agriculture, and it is easy to cause air pollution and affect the quality of vegetables. In the research of the existing automatic vegetable transplanting machine in China, it has not been found that there is a small automatic vegetable transplanting machine which can meet the requirements of the small and medium-sized facility agriculture.

2. Materials and methods

2.1 Design of the structure of transplanting machine

In this paper, the structure of small and medium-sized agricultural fully-automatic transplanting machine is shown in Figure 1. The transplanting machine is mainly composed of the seedlings tray carrier unit, seedling extraction unit, seedling separation unit, planting unit, machine chassis and whole control system.

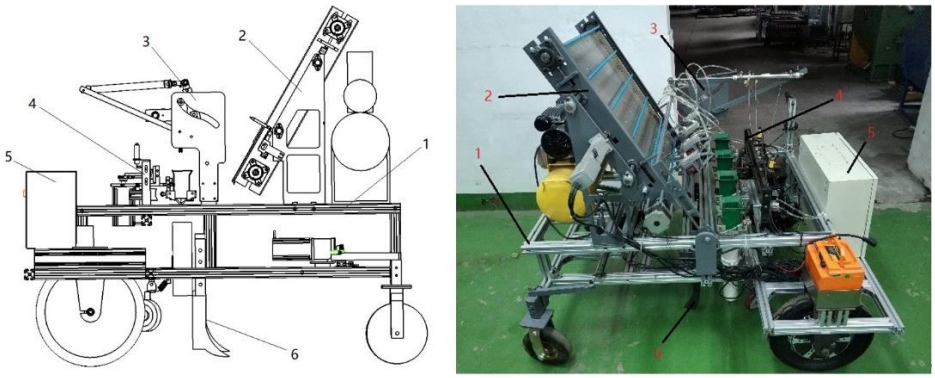

1.Transplanting machine chassis 2. Seedlings tray carrier 3. Seedling extraction unit 4. Seedling separation unit 5. Control system 6. Planting unit

Fig.1 Small automatic transplanting machine

ISSN: 2414-1895 DOI: 10.6919/ICJE.202004_6(4).0009

2.2 Design of all units of small automatic transplanting machine

2.2.1 Design of seedlings tray carrier and feeding part

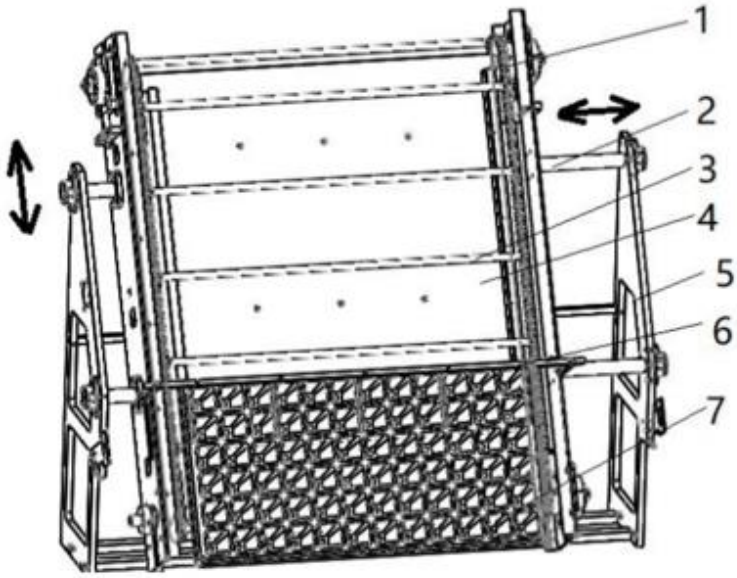

1. Sprocket chain 2. LM shaft 3. Plug shaft 4. Box 5. Frame 6. Pressing rod

Fig.2 Seedlings tray carrier and feeding part

The function of the seedlings tray carrier and feeding part is to transport the tray seedlings to the seedling extraction position accurately. The main parts include sprocket chain, LM shaft, box, plug shaft, pressing rod and supporting frame. There are two pairs of sprocket chain symmetrically arranged on both sides of the box and tensioned by the tensioning device. Twelve plug shafts are evenly fixed on the chain, and the plug are fixed on the plug shafts. The longitudinal movement is realized by the chain function of the sprocket. The pressing rod is fixed on the box to prevent the tray from being brought up due to the sticky effect during the seedling extraction process. The whole box is fixed on the frame through two LM shafts, and the angle is 60 degrees with the horizontal plane, so that the tray can move horizontally along the smooth axis.

2.2.2 Design of seedling extraction part

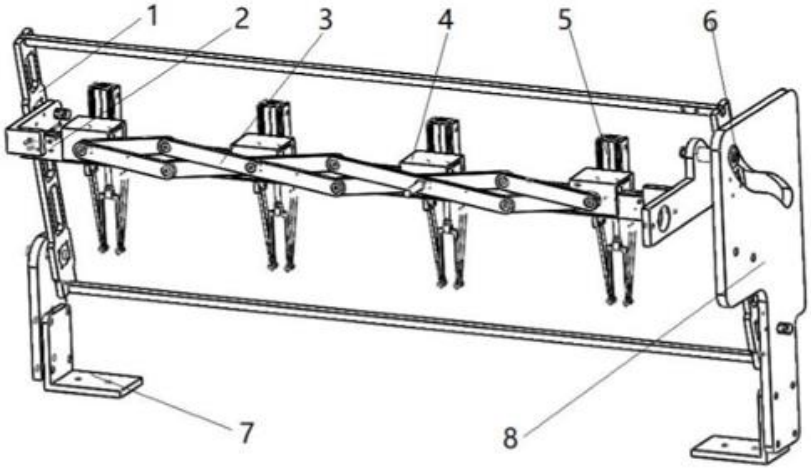

1. Large gantry 2. Small gantry 3. Diamond-shaped mechanism 4. Guide rail slider5. Seedling claw 6. Slide plate 7. Base fixing plate

Fig.3 Seedling extraction part

ISSN: 2414-1895 DOI: 10.6919/ICJE.202004_6(4).0009

The function of the seedling extraction part is to take the potted seedlings with the seedling claws and transport them to the seedling throwing point for placing. The seedling extraction unit mainly include the large gantry, small gantry, diamond-shaped mechanism, guide rail slider, seedling claws, slide plate, and base fixing plate. The large gantry, slide plate, small gantry, slide bearing, and so on constitute a variable pitch mechanism to change the action of the seedling extraction claws, while the diamond mechanism, guide rail, slider and so on constitute a variable pitch mechanism to change the distance between the seedling extraction claws. There is a slide in the slide plate. When the large gantry rotates around the bottom bearing pin, it can drive the small gantry to move in the slide through the slide bearing, and then drive the end seedling extraction claws to move along a certain path. That is, when the slide bearing is at the lowest part of the slide, the seedling extraction claw can be vertically inserted into the tray for seedling taking. When it moves to the highest part of the slide, the diamond mechanism drives the seedling extraction claw to move to the top of the seedling separation part, which corresponds to the seedling cup one by one, and release the seedling extraction claws to make the seedlings fall.

2.2.3 Design of seedling separation part

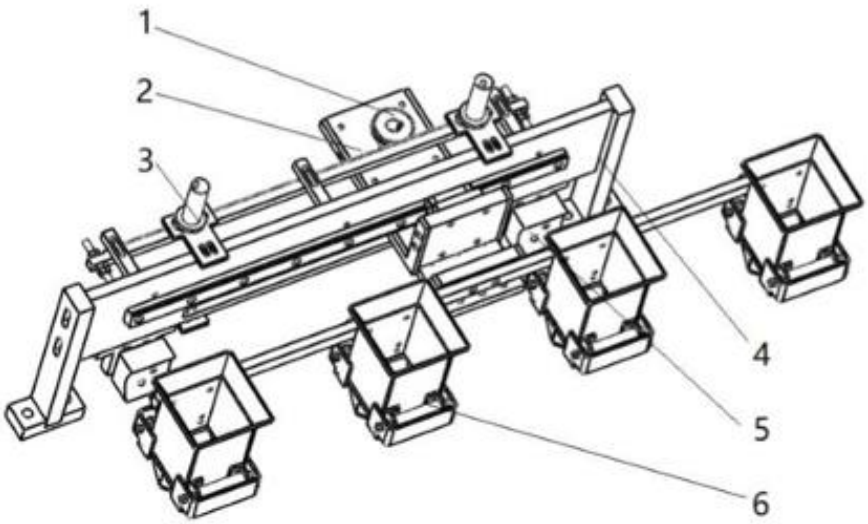

1. Rack and pinion 2. Connection board 3. Sensor4. Frame 5. Seedling dropping unit 6. Seedling cup

Fig.4 Seedling separation part

The seedling separation unit adopts the rack and pinion reciprocating movement seedling division mode, which is characterized by the realization of static seedling dropping, increasing the success rate of seedling dropping, rapid response and easy to adjust the row spacing. For two rows of planting, four seedling cups are installed, and the row spacing is set as 450mm. The main parts include rack and pinion, seedling cup, seedling dropping unit, frame, sensor as shown in Figure 4. The rack is fixed on the frame, and the gear on the stepping motor drives the seedling cup to move left and right repeatedly along the rack. When met the photoelectric sensor at the left and right position the movement stops, and the seedling dropping unit starts to open the seedling cup and drop the seedlings vertically into the planting parts to complete the seedling planting.

Volume 6 Issue 4, 2020
DOI: 10.6919/ICJE.202004_6(4).0009

2.2.4 Design of transplanting machine chassis

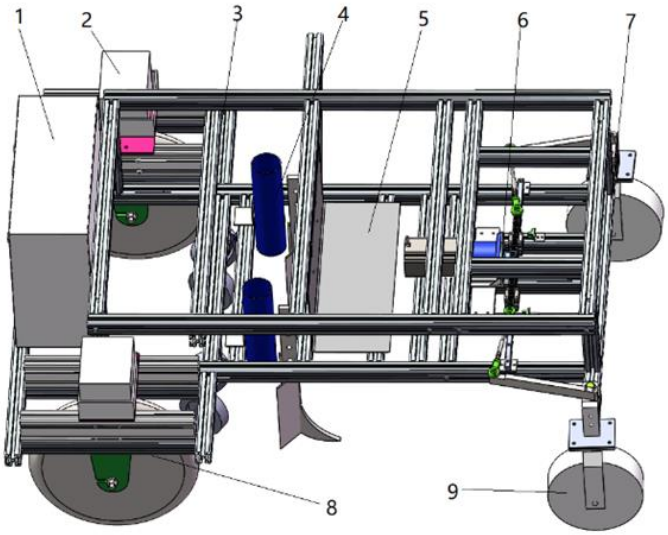

1.Electrical cabinet 2. Battery and battery case 3. The frame 4. Planting device assembly 5. Exit board 6. Steering mechanism 7. Front axle 8. Drive unit (in-wheel motor) 9. Wheel

Fig.5 Whole structure of the transplanting machine chassis

The function of transplanting machine chassis is to arrange and combine other parts to drive the whole machine to move and turn, as shown in Figure 5, it mainly including the chassis frame, front and rear wheels, steering device, and other units. The chassis frame is made of aluminum profiles. There are motor, rack and pinion and connecting rod in the front wheel steering device. The gear on the motor makes the rack move, thus driving the connecting rod connected with the rack to move to complete the left and right steering of the whole machine. The rear wheel drives the machine forward and backward. The chassis is moved and rotated by the operator who operates the wireless remote control synchronously in close range, which can realize the wireless remote control without passengers, reduce the load space, simplify the layout of other components, and then reduce the demand of the drive system.

2.3 Working principle of transplanting machine

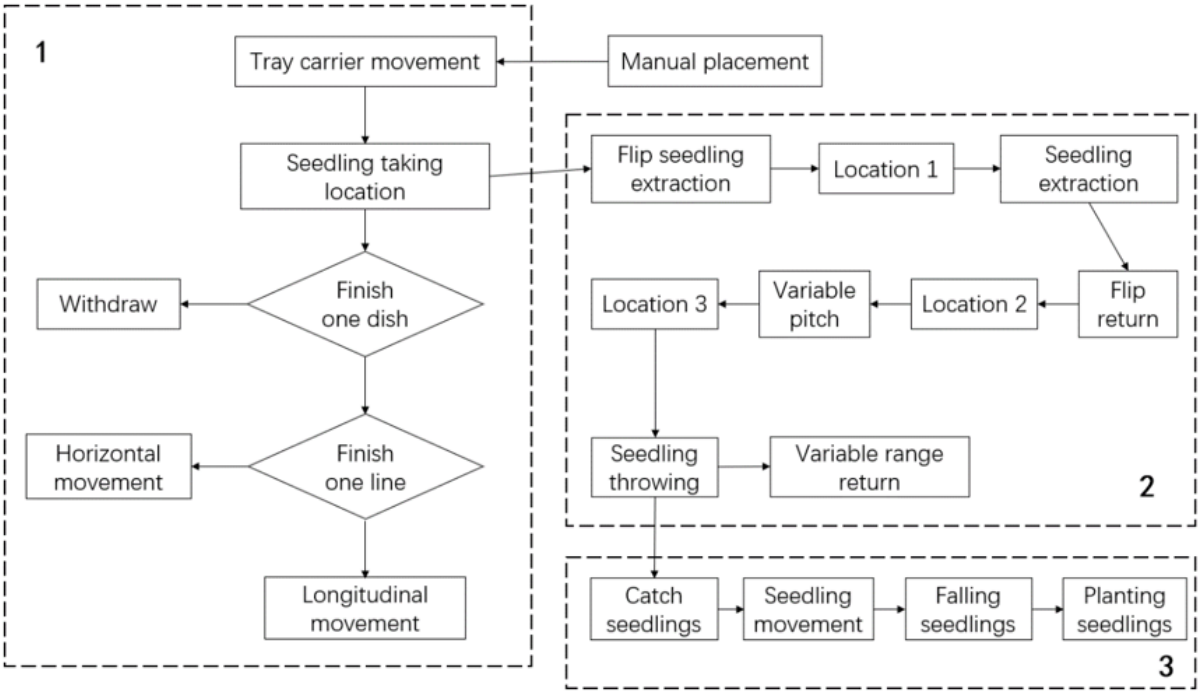

Fig.6 Machine motion flow chart

ISSN: 2414-1895 DOI: 10.6919/ICJE.202004_6(4).0009

The whole machine motion flow chart is shown in Fig. 6. The working principle of the automatic transplanting machine for the plug seedlings is as follows: When the transplanting machine starts to work, the operator places the tray on the feeding part of the transplanting machine and starts to move the machine forward by wireless remote control. The feeding part of the machine starts to enter the tray, and sends the tray to the position of the seedling extraction claws. Then the seedling extraction claw s turn over, insert into the hole plate, clamp with seedlings and return with seedlings. When the seedling extraction claws moves to the vertical position, the diamond mechanism pushes out the variable distance, so that the four seedling taking claws correspond to the four seedling cups of the seedling separation part one by one, and then the seedlings throwing begins. After the seedling separation part receives the seedlings, the seedlings are transported to the top of the seedling guiding barrel in the planting part to stop, and the seedling falling part starts to make the seedlings follow the guiding barrel. The seedling barrel falls vertically into the groove opened by the trencher, and then it is covered with soil for pressing to complete seedling planting. The horizontal and vertical feeding of the feeding part , the clamping, turning and variable distance of the seedling extraction part, the movement of the seedling separating part, the opening and closing of the seedling cups are all completed by the driving elements (such as electric machinery, electric actuator, cylinder, etc.) controlled by PLC.

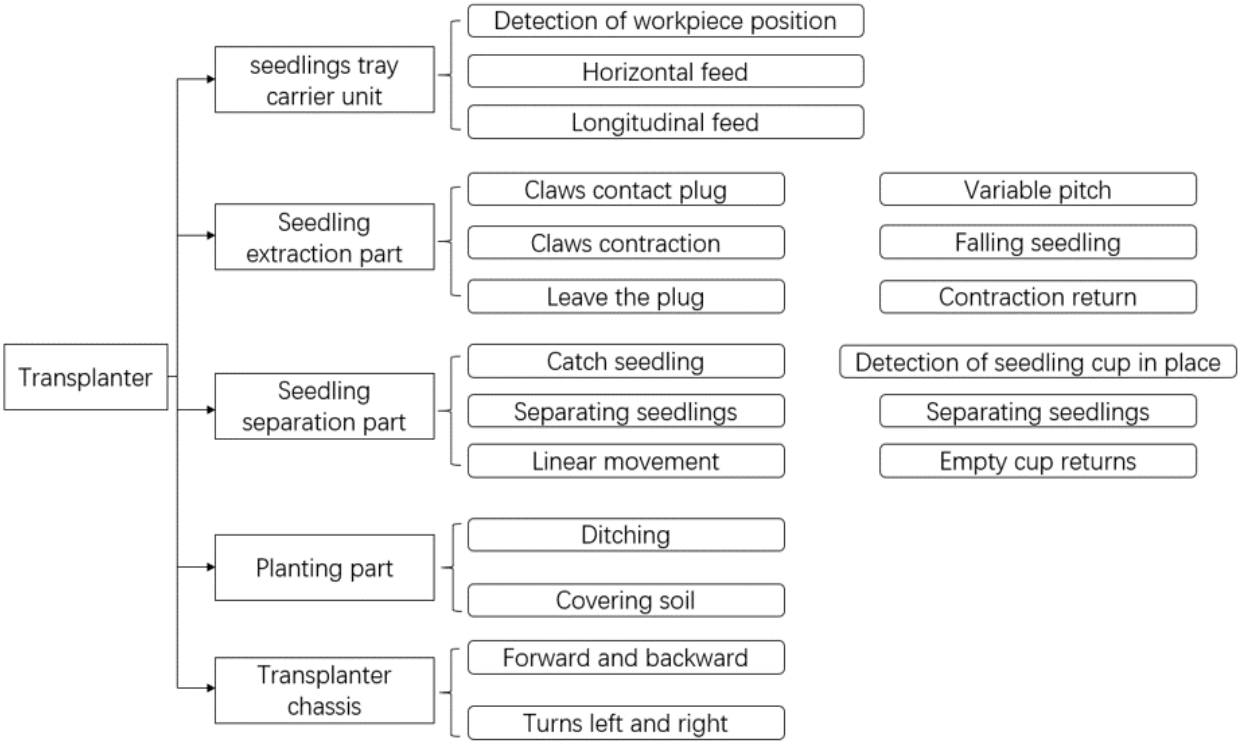

Fig.7 Component composition and action

3. Simulated planting experiment of transplanting machine

3.1 Aims

In order to test the whole planting performance of the transplanting machine, the qualified rate of small automatic transplanting machine was tested under different planting frequency.

3.2 Conditions

(1)Test equipment: the small and medium-sized agricultural fully-automatic transplanting machine, camera, tape measure and spade developed in this paper.

(2)Pot seedling selection: 72-hole tray cucumber seedlings, with a seedling age of about 20 days, with two leaves and one core or three leaves and one core, the average seedling height is about 13.5cm.

ISSN: 2414-1895 DOI: 10.6919/ICJE.202004_6(4).0009

3.3 Steps

(1) Pile the sand with spade to form a ridge in the outside. The width of the ridge is 82cm (excluding the ridge), the height of the ridge is 18cm, and the length of the ridge is 500cm;

(2) Place the potted seedlings, prepare the transplanting machine before moving to the ridge, inflate the air tank, and make preparations;

(3) Connect PLC to set different planting frequencies for transplanting machine, specifically 40 plants / min / row, 50 plants / min / row, 60 plants / min / row;

(4) At the end of the experiment, the planting success rate under different planting frequencies were counted, and the sand ridge is shown in Figure 8, and the principle prototype simulation planting test is shown in Figure 9.

Fig.8 Sand ridge

Fig.9 Principle prototype planting

3.4 Results and analysis

The principle prototype simulation planting experiment of small and medium-sized facility agricultural fully-automatic transplanting machine was carried out to record the number of potted seedlings missed and the number of potted seedlings fallen in the transplanting experiment of 72-hole tray cucumber under different planting frequency and calculate the qualified rate of planting. The qualified rate of planting Q denotes the proportion of the total number of potted seedlings that have neither missed planting nor fallen to the total number of experimental plants, the formula is expressed as:

$$Q = \frac{N_z - N_l - N_d}{N_z} \times 100\%$$

In the Formula: N_z denotes the total number of seedlings; N_l denotes the number of missed plants; N_d denotes the lodging seedlings. The test results are shown in Table 1.

ISSN: 2414-1895 DOI: 10.6919/ICJE.202004_6(4).0009

Tab.1 Simulation planting test results of principle prototype

Planting frequency (Strain/min/line)	Total number of seedlings (N_z)	Number of missed plants (N_l)	Lodging seedlings (N_d)	The qualified rate of planting (Q)
40	144	2	1	97.9
50	144	3	2	96.5
60	144	4	4	94.4

It can be seen from the table 1, when the planting frequency is 40 plants / min / row, the qualified rate is 97.9%; when the planting frequency is 60 plants / min / row, the qualified rate is 94.4%. With the increase of planting frequency, the qualified rate of planting decreased. The reason for this phenomenon is that: with the increase of planting frequency, the single cycle time of each component decreases, especially the time of seedling separation unit to catch and throw potted seedlings decreases, which leads to the phenomenon of seedling hanging of individual potted seedlings with large branches and leaves. The potted seedlings are not fully put in or separated from the seedling cups, resulting in the increase of the number of plants that are finally missed and the qualified rate of planting is reduced.

4. Conclusion

(1) Aiming at the requirements of vegetable transplanting in small and medium-sized facilities, a small automatic vegetable transplanting machine with electric drive and wireless remote control is designed. The transplanting machine is mainly composed of a transplanting chassis, hole tray feeding part, seedling extraction part, seedling separation part, planting part and control system. This paper introduces the structure and function of the transplanting machine, and the working principle of the whole machine in detail.

(2) In order to test the transplanting performance of the small fully-automatic transplanting machine, a simulation experiment was carried out to determine the transplanting qualified rate of the transplanting machine under different transplanting frequencies. It can be seen from the test results that with the increase of planting frequency, the qualified rate of planting decreased. When the planting frequency was 60 plants / min / row, the qualified rate was 94.4%. It shows that the main parts of the transplanting machine designed in this paper coordinated in motion and stable operation, which meets the transplanting requirements of seedlings in dry land.

Acknowledgements

This work is supported by the National Natural Science Foundation of China (51675239), the construction work of dominant subjects of higher education of Jiangsu Province, China (SU CAI (2014) No. 37); A Project Funded by the Priority Academic Program Development of Jiangsu Higher Education Institutions (PAPD-2018-87); The Natural Science Project of Jiangsu Higher Education Institutions (19KJA430018-2019-2022); The Research and Development Program of Zhenjiang (NY2019015).

References

[1] Cao, J., 2019. Current situation and Countermeasures of vegetable industry [J]. Seed Science and Technology. 37(03), 18-21.

[2] Hu, W.Y., Zhang, Y.X., Huang, B., et al., 2017. Soil environmental quality in greenhouse vegetable production systems in eastern China: Current status and management strategies[J]. Chemosphere. 170:183-195.

[3] Ji, H., Huang, Z., 2018. Introduction of greenhouse types and performance in facility agriculture [J]. Modern rural science and technology. 9: 103.

ISSN: 2414-1895 DOI: 10.6919/ICJE.202004_6(4).0009

[4] Han, C.J., Zhang, X.J., et al., 2011. Present status and analysis of dry-land auto-transplanting seedling technique [J]. Agricultural mechanization research. 33 (11): 238–240.

[5] Wang, J.Q., Fu, Z.T., Zhang, B., et al., 2018. Decomposition of influencing factors and its spatial-temporal characteristics of vegetable production: A case study of China [J]. Information Processing in Agriculture. 5(4): 477-489.

[6] Liu, C.X., Li, X.H., Yue, X.M., et al., 2012. Status and Development Trend of Dryland Transplanters in China [J]. Agricultural mechanization research. 34(11):249-252.

[7] Kumar GVP, Raheman H. 2011. Development of a walk-behind type hand tractor powered vegetable transplanter for paper pot seedlings. Biosystems Engineering. 110(2): 189-197

[8] Zhang, X.Q., Ge, J.G., Zhang, X.H., et al., 2018. Research status and development of vegetable transplanter in China and abroad [J]. Hebei Agricultural Machinery. 2018(04):39-40.

[9] Lu, Y.T., Li, Y.X., Liu, Y., et al., 2011. Analysis of transplanter and transplanting technology in China and abroad [J]. Xinjiang Agricultural Mechanization. 03:29-32.

[10] Yin, H., 2016. Development Trend of Vegetable Transplanting Machinery in China [J]. New Technologies and Products in China. 9: 172-173.

[11] Zhang, Z.G., Cao, W.B., et al., 2013. Development and prospect of plug seedlings automatic transplanter [J]. Agricultural mechanization research. 5, 237–241.

[12] Han, C.J., Yang, W.Z., Zhang, X.J., et al., 2013. Design and test of automatic feeding system for pot tray seedling transplanter [J]. Journal of Agricultural Engineering. 29 (8): 51-61.

[13] Xu, F., Mao, H.P., Hu, J.P., et al., 2017. Space coordination design and test of feeding and taking-off device of automatic transplanter [J]. Research on agricultural mechanization. 9:88-92.

[14] Wang, Y.W., He, Z.L., Wang, J., et al., 2018. Performance test of vegetable pot seedling automatic transplanter in Dryland [J]. Journal of Agricultural Engineering. 34(3): 19-25.

[15] Yang, Q.Z., Xu, L., Shi, X.Y., et al., 2018. Design of seedlings separation device with reciprocating movement seedling cups and its controlling system of the fully-automatic plug seedling transplanter [J]. Computers and Electronics in Agriculture. 147:131-145.