ISSN: 2414-1895 DOI: 10.6919/ICJE.202004_6(4).0036

Application of NB-IoT Technology in Urban Lighting System

Xiaochun Zhang

Wenzhou Polytechnic, Wenzhou325035, China.

504519152@qq.com.

Abstract

The paper compares and studies various internet of things communication technologies. The paper describes the technical characteristics of NB-IoT, and proposes a design of urban lighting system based on NB-IoT. It puts more emphasis on the design of the single lamp control system. The hardware circuit is mainly composed of the sensors module, main microprocessor, NB-IoT communication module, output module, universal subscriber identity module, power module and pulse dimming module. The main microprocessor adopts STMicroelectronics STM32L431RCT6 basic series and the NB-IoT module adopts Quectel BC95. The paper also introduces the software design flow of the single lamp control system and the working process of the monitoring center. Finally,the research of smart light pole combined with 5G communication MicroStation is determined as the next research direction.

Keywords

Smart city, NB-IoT, Lighting system, Single lamp control system.

1. Introduction

Urban green lighting plays a significant role in improving urban environment, building livable cities, enhancing the overall functions of cities and promoting the development of urban economy. During the 12th five-year plan period, the development of China's urban lighting is still in the primary stage.According to the requirements of *Outline of the 13th five-year plan for urban green lighting*,[1] the country must establish intelligent management systems in an all-around way, to improve the lighting information management. The coverage rate of intelligent control system should reach 80% in cities at prefecture-level and county-level cities in the eastern and central regions.And the application rate of intelligent control technology in new and improved (expanded) lighting projects should reach 100%.

2. The study on the control modes of urban lighting system

In the initial stage, the control modes of urban lighting were mainly based on manual control and time control. Later, intelligent control mode based on three-way system was developed, which had the advantages of high degree of automation, strong strain capacity, automatic detection facilities.But the localization was not accurate and the ability of error detection was not well.In recent years, the lighting control methods based on internet of things have been developed, mainly including power line carrier-based communication technology, short-range wireless communication technology based on zigbee and long-distance wireless communication based on LoRa. In the method of power line carrier-based ,high-frequency signals carrys on lines with low-speed transmission. The advantage is that as long as there are power lines, signals can be transmitted.It is economically and can be transmitted over long distances. The disadvantage are that the communication success rate is lower because of the complex and changeable power lins ,the communication signal is easy to be interfered by the peak pulse and the reliability is poor. Wireless communication technologies such as zigbe and

ISSN: 2414-1895 DOI: 10.6919/ICJE.202004_6(4).0036

LoRa have the advantages of large capacity, low power consumption and low cost.But they are easily affected by the interference of the same frequency signals and the shielding of trees and buildings. In view of the shortcomings of the above Internet of things communication technology, Narrowband Internet of things(NB-IoT) technology has the characteristics of wide coverage, low power consumption, mass connection and excellent architecture. Therefore, the design and research of urban lighting system based on NB-IoT technology is of great significance. Its successful research and application will significantly improve the intelligent management level of urban lighting system.[2]

3. The characteristics of NB-IoT

NB-IoT is an emerging wireless access technology of 3GPP(3rd Generation Partnership Project), which belongs to the low-power wide-area Network (LPWAN) field. It works in the authorized spectrum and has the following features:[2-3]

(1) flexible deployment: it can be deployed within the 200kHz bandwidth in GSM network, so more deployment options can be provided within the licensed spectrum. NB-IoT requires only a minimum system bandwidth of 180kHz for downlink and uplink. There are three deployment modes, which are independent deployment, guard band deployment and in-band deployment.

(2) wide coverage: by improving the power spectral density and increasing the number of retransmission, NB-IoT improves 20dB gain compared with GPRS in the same frequency band. It can provid wider and deeper coverage.

(3) multi-connection: it has massive connection capacity, low transmission rate, and insensitive to network delay. With the help of Power Saving Mode (PSM) and Enhanced Discontinuous Reception (eDRX) mechanism, more devices can be connected at the same time ,to meet the requirement of reliable access for all street lights in the coverage area.

(4) low power consumption: PSM and eDRX are mainly used to reduce terminal power consumption and meet the requirements of energy saving for urban lighting.

(5) low cost: NB-IoT terminal chips are cheap. In addition, the low rate, low power consumption and low bandwidth of NB-IoT also bring the advantage of low cost.

4. Design of urban lighting system based on NB-IoT

The urban lighting system based on NB-IoT technology is shown in the figure 1, including the perception layer, the communication transmission layer and the application layer. The perception layer is the single lamp control system, which communicates with the base station by NB-IoT technology. The main function is to collect and send the information of street lamps, receive the commands from the management platform.So that people can easily monitor and control the single lamp facility. The communication transmission layer is composed of base station, core network and Internet of things management platform. Working under the authorized spectrum, it takes advantage of the wide area and low power consumption of NB-IoT to ensure data security and access security. The application layer is mainly the monitoring center, including mobile phone terminal, PC terminal and server. It can analyze , summarize and store the data.It also can send control commands. Administrators can remote query the database and manage the lamps in PC terminal.They also use the application in mobile terminal which can monitor and manage anytime and anywhere.[4]

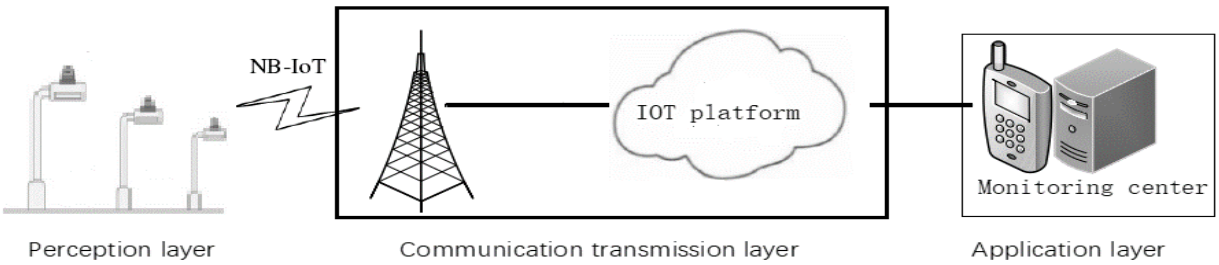

Figure 1 The urban lighting system architecture based on NB-IoT

ISSN: 2414-1895 DOI: 10.6919/ICJE.202004_6(4).0036

4.1 Hardware design of single lamp control system

The hardware design diagram of the system is shown in figure 2. It is mainly composed of sensors module, main microprocessor, NB-IoT communication module, output module, universal subscriber identity module, power module and pulse dimming module. The single-lamp controller uses sensors to detect the voltage signal, current signal and working power of the street lamp. The sensors detect the temperature, brightness and meteorological environment around the street lamp. Then, the collected data will be sent to the monitoring center by the NB-IoT module via the operator network. The NB-IoT module works under the control of the main microprocessor. The management platform of the monitoring center analyzes data and sends control commands. Street lamp terminals receive commands from the monitoring center by NB-IoT module. The main microprocessor controls the switch of street lamps by output module and adjusts the brightness of street lamps by dimming module. Each single lamp controller has the unique universal subscriber identity module[5] , corresponding to the unique lamp. The monitoring center identifies each lamp according to the USIM module, so as to accurately control it.

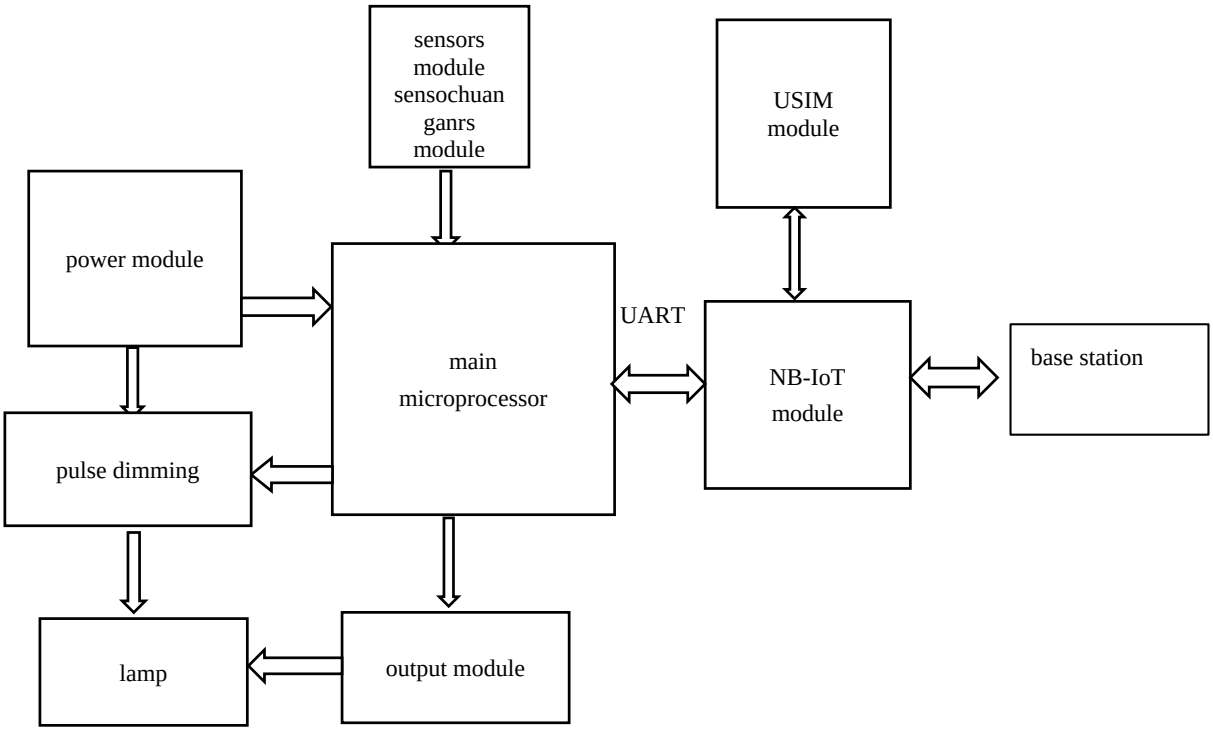

Figure2 structural block diagram of single lamp controller system based on NB_IoT

The system places the NB-IoT module inside the street lamp controller and places the antenna outside.This enables the street lamp to communicate with the monitoring center directly. The NB-IoT network of the three major telecom operators can be selected. The NB-IoT network based on the 800 MHz frequency band has strong signal penetration and great advantages in coverage, which can meet the coverage needs of urban street lamps distributed in complicated environments[4]. Considering the chip cost, power consumption, working frequency, reliability and other performance indicators, STMicroelectronics STM32L431RCT6 basic series is selected as the main control chip. The working frequency is up to 80MHz and it can operate in the temperature range of -40 to 85℃, with low power consumption, low cost and high reliability. NB-IoT module adopts Quectel BC95, with the size of 23.6mm×19.9mm×2.2mm, which can meet the requirement of small size of the system. Its communication chip adopts HUAWEI Hays Boudica120, which supports 3GPP Release13 standard protocol. Compared with GPRS, it has 20dB signal gain and wider coverage. Boudica120 supports IP/UDP/CoAP protocols. Boudica120 has a high degree of integration.Its interior integrates three ARM cores, with strong processing power and high ability of wireless communication. Figure 3 shows the minimum circuit diagram of the NB-IoT module[6].

ISSN: 2414-1895 DOI: 10.6919/ICJE.202004_6(4).0036

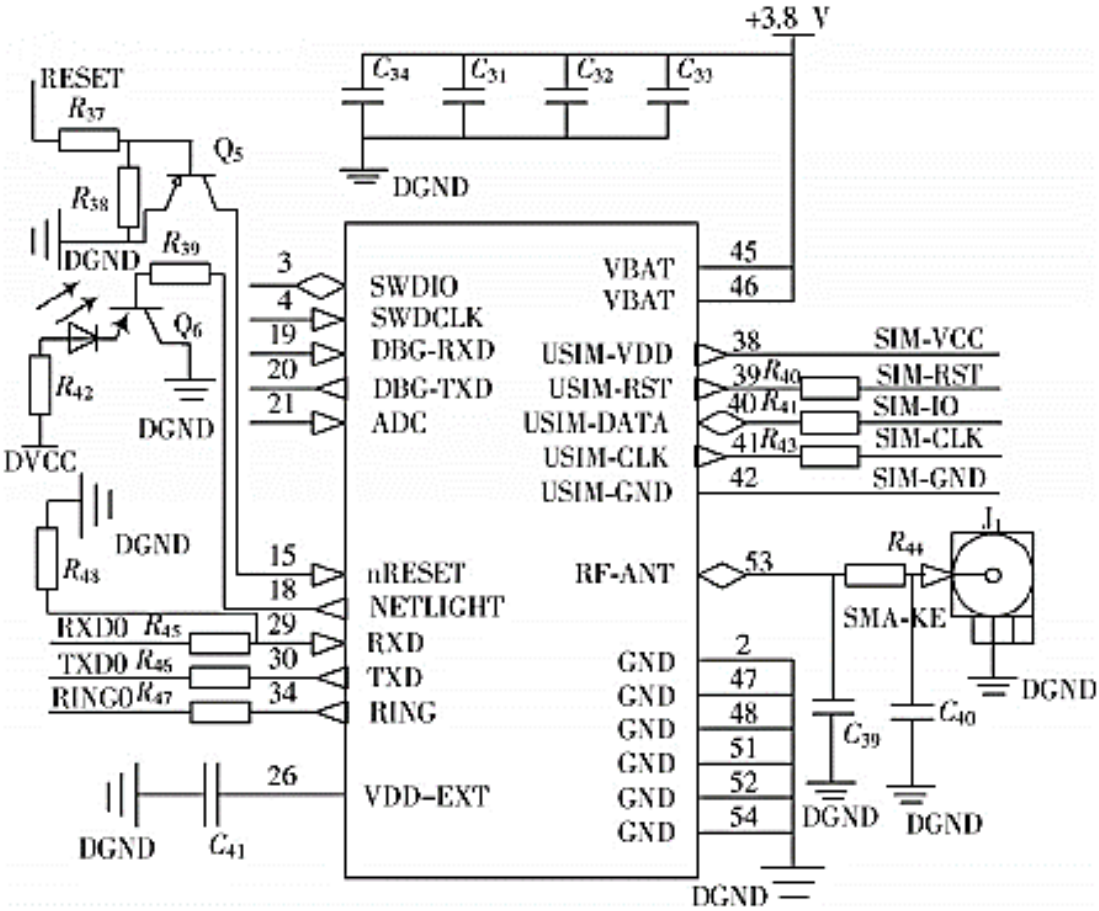

Figure 3 minimum circuit diagram of NB-IoT module

System using Electromag netic-Interference filter circuit [7]to remove the grid harmonic， to inhibit the invasion of the surge and to guarantee the normal work of the control circuit.The current and voltage signals of street lamps were collected by measuring chip RN8302. Four precision current transformers are used to convert current signal.Three miniature voltage transformers are used to isolate the AC voltage and convert the voltage signal into the current signal. Voltage clamp circuit is used to protect the lamp controller from being damaged by the pulse voltage of the power grid. Bistable relay JE7 is used to control the street lamp to reduce the energy consumption of maintaining relay in the normally open or normally closed state. A photosensitive resistor LXD3537 is used to collect ambient light intensity. In addition, a variety of other sensors can be extended to monitor the environment around street lamps,so that the monitoring center can timely monitor and analyze the surrounding environment.[6]

4.2 Software design of single lamp control system

The system uses C language to write the program, and Keil uVision5 for compilation and debugging. The main functions of the system are controling the lamp on or off, brightness adjustment, collecting the voltage and current signal and environmental light intensity. The program flow chart of the system is shown in figure 4. After power on, the main control chip STM32 is initialized first, and then the working parameters of the software are set, including IP address setting, port setting, working frequency setting and so on.Then BC95 is initialized.The system checks whether the communication with MCU and the serial port communication are normal. Then the system search for the base station, link to the network,then judge whether it is successfully. After entering the network successfully, the data collected by the sensor is packaged and sent to the monitoring center server through NB-IoT network. At the same time, it also receives the control command from the monitoring center, and then outputs the control operation command.

ISSN: 2414-1895 DOI: 10.6919/ICJE.202004_6(4).0036

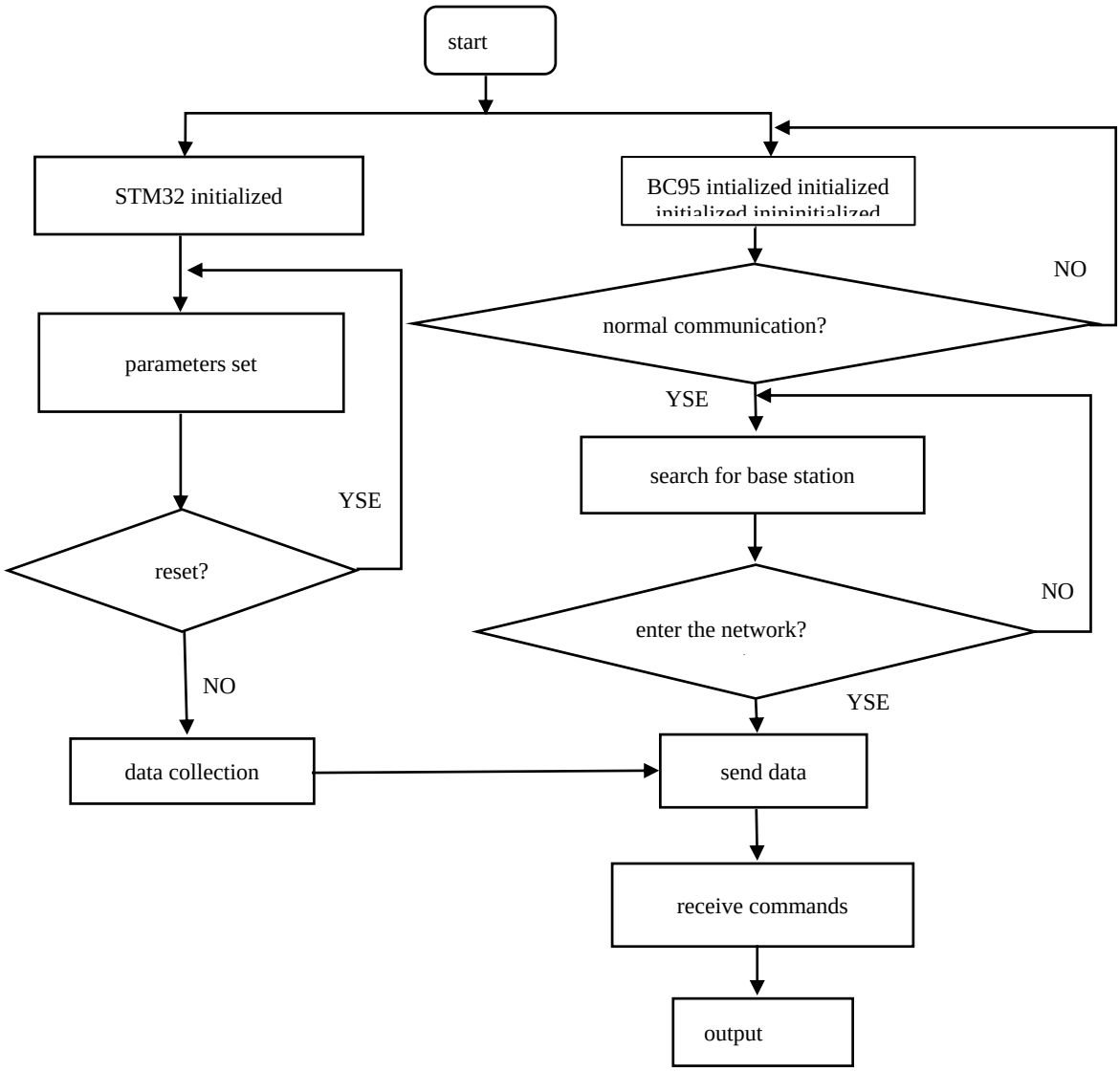

Figure 4 software flow of single lamp controller system based on NB_IoT

4.3 The monitoring center

The monitoring center is the management platform of intelligent control. The system adopts HUAWEI 0ceanConnect platform, which has the capability of adapting aboundant protocols and supportting the connection of massive terminal devices.The platform provides functions of data storage,data analysis and data query. The lamp terminal controller in the system sends the real-time data of lamps to the IoT cloud platform by the NB-IoT module, and the management platform accesses the relevant data by the northbound RESTFul-API service interface[8]. The monitoring center analyzes and processes the big data to get the optimal lighting scheme. When abnormal data is found, the electronic map of the platform will show the location of equipment and fault type. It can automatically alarm and inform the maintenance personnel. When there is an emergency, the system will give the optimal treatment suggestions, which can provide reference for the managers making decision.

5. Conclusion

The urban lighting control system based on NB-IoT designed in this paper does not need to rebuilt the network.It has good anti-interference, wide coverage, low power consumption and low cost.It not only improves the energy utilization efficiency, but also improves the level of urban lighting management. With the advent of 5G era, in-depth research will be carried out in combination with smart lamp pole and 5G communication MicroStation which will promote the smart city development.

ISSN: 2414-1895 DOI: 10.6919/ICJE.202004_6(4).0036

Acknowledgments

Project supported by Education Department of Zhejiang Province (Y201534871).

Project supported by Wenzhou Polytechnic (WZY2014036).

References

[1] Baoquan Zeng,Linfang Yang:Research and application of intelligent street lamp control system based on NB-IoT , Intelligent computer and Application, vol.9(2019),284-288.

[2] Yulong Zhou,Xiao Ding,Jinquan Wang:Key technology and application prospect of NB-IoT,ZTE communication technology, vol.22(2016),43-46.

[3] Guohua Dai,Junhua Yu:Background, standard development, characteristics and business research of NB-IoT,Mobile communication, vol.24(2016),31-36.

[4] Yanjiao Li:Design and implementation of intelligent street lamp monitoring system based on NB-IoT ,Shanghai Normal University,2019,8-14.

[5] Wei Ye,Wei Lv,Kuan Hong,et al. Intelligent control system of road lighting based on NB-IoT Technology, Journal of lighting engineering,vol.28(2017),20-23.

[6] Chaohua Wu,Yunfei Li,Jianfeng Yan:Design of street lamp control system based on NB-IoT , Modern electronic technology, vol.41(2018),5-9.

[7] OH S M,SHIN J S. An efficient small data transmission scheme in the 3GPP NB-IoT system ,IEEE communications letters,vol.21(2017),660-663.

[8] Kaiyuan Cheng,Xiaoqin Lian,Dong Zhou,et al.Design of urban intelligent street lamp monitoring system based on NB-IoT,Measurement and control technology,vol.37(2018),19-22.