International Core Journal of Engineering Volume 6 Issue 3, 2020
ISSN: 2414-1895 DOI: 10.6919/ICJE.202003_6(3).0013

# Working Principle and Fault Analysis of BoomBox Remote Explosion System for Geophysical Exploration

Qiang Yue

Southwest Geophysical Exploration Branch, Petro China Oriental Geophysical Exploration Co., Ltd., Chengdu 610213, China.

## Abstract

**BoomBox remote explosion system is the main synchronous source remote explosion system used in China at present. It has the advantages of high precision, stable performance, good adaptability, simple operation and small size. Because of the ignorance of BoomBox remote explosion system, some field constructors can not operate the equipment regularly, resulting in avoidable faults of the equipment. Thus affecting field production and acquisition. In this paper, the development history of remote detonation system, the composition characteristics and working principle of BoomBox are described in detail. The specific working process of BoomBox is introduced. The causes of three common faults and the methods of eliminating them are also analyzed in depth. These contents help field constructors to understand and familiarize themselves with the working characteristics of BoomBox remote explosion system and prevent the recurrence of irregular operation affecting the use of equipment.**

## Keywords

**BoomBox remote explosion system; Encoder; Decoder.**

## 1. Introduction

The remote explosion system of synchronous source is an important supporting equipment in geophysical exploration acquisition equipment. Its main function is to control the start of source excitation and data acquisition, and to ensure the start-up clock synchronization. The clock synchronization in the remote explosion system is of great significance to the subsequent processing and interpretation of seismic exploration data. The working process of the remote explosion system is that the decoder sends out a high-pressure trigger detonator immediately after receiving the command signal from the digital seismograph, which causes the explosive to generate seismic wave. At the same time, it provides two accurate and reliable data, that is, verify the time break and wellhead time, and send them back to the encoder. Remote explosion system is used as the source synchronization of geological structure analysis, so as to find oil and gas by using seismic wave. Remote explosion system is widely used in oil exploration, coal, construction, metallurgy and other aspects of the ocean and land.

With the development of modern seismic exploration towards digitalization, high precision and high density, the traditional analog remote blasting systems, such as remote controlled blaster 300 and Macha series, which were used in the early stage, are easily interfered by the outside world due to the limitation of time precision and signal transmission mode, and cannot meet the needs of modern digital exploration and high precision exploration. At present, all the seismic exploration instrument systems have been equipped with new digital remote explosion systems, such as shotpro, Boombox, SGD, etc. At present, the Boombox synchronous source teleblasting system, which is usually produced by seismosource company, is widely used in China.

ISSN: 2414-1895 DOI: 10.6919/ICJE.202003_6(3).0013

## 2. Composition and characteristics of boombox

As a kind of all digital remote explosion synchronization system, Boombox remote explosion system is mainly used for the synchronization and control of explosive excitation during the field acquisition of seismic team. The system is mainly composed of Boombox unit, Motorola GM338 radio station, antenna part and related peripherals such as power supply and bracket. Boombox unit is the nerve center of the whole remote explosion system, which is responsible for the initiation control, signal processing and clock synchronization of the whole remote explosion system. Motorola radio GM338 is responsible for external communication and signal transmission of the system. The antenna part is responsible for the signal gain of the system and amplifying the received and received signals. The peripheral part is responsible for the physical support of the whole system, internal transmission of circuit signals and power supply. When the system works, two Boombox units are usually needed to work together, one as encoder and the other as decoder. In the case of complex terrain, choose the master-slave mode and add a Boombox as the repeater to shoot. Any bootbox unit can be set to corresponding working mode through software.

Boombox remote explosion system has the following three characteristics. ① Chip intelligence. MCU micro-processing chip is adopted in the chip design, which enhances the data storage and processing ability. The data can be formed, processed and then packaged for transmission, and the receiver can accept, process and then use it, which greatly improves the accuracy of data transmission. The ignition accuracy is improved to microsecond level, and the ignition energy is also reduced. ② Structural optimization. The compact structure design makes the system small in volume, light in weight, simple in operation, wide in temperature range, and directly reduces the construction labor cost. ③ Relay mode. It develops a relay mode of operation. After the master-slave mode is set, the encoder changes to the master mode. During shooting, the main encoder controls the decoder to synchronize and control the explosive excitation through the relay set earlier. Through the use of relay mode, the field acquisition enhances the reliability and adaptability in Hilly and mountainous areas and complex electromagnetic environment.

## 3. BoomBox working mode and principle

The main work flow of Boombox remote detonation system is as follows: first, detonate the detonator within the specified time. Seismic exploration requires that detonators have the characteristics of uniform initiation and detonate within 1ms under the action of initiation current. If the system adopts 10A current detonator, the detonator can be detonated within 1ms. Secondly, provide accurate and reliable time break and wellhead signals. The time break signal, that is, the explosion signal, is not only the sign of the starting of the shot point energy, but also an important technical index to measure the remote explosion synchronization system. Finally, the central recording unit of seismograph is started simultaneously with the explosive source. The explosive explosion and the seismograph receive the seismic information synchronously, which is realized by the seismograph sending the initiation command and starting the seismograph central recording unit to receive the seismic information.

In the boombox teleblasting system, the encoder, decoder and repeater are mainly used. The main working principle is shown in Figure 1. In the normal operation mode, a Boombox connected with the seismic recording instrument is used as the encoder, and a decoder is controlled by the radio station to shoot. The seismograph sends a start command to the encoder, and the encoder will send an ignition command to the decoder after receiving the start command. If the decoder has been charged, after receiving the ignition command, it will output high voltage to detonate the detonator. At the same time, the encoder will also output time break signal to the seismograph. After initiation, the decoder will record the wellhead signal and send it back to the encoder together with other QC data. In case of difficulty in direct communication between encoder and decoder, the master mode encoder can designate another bombox as the repeater between encoder and decoder through wireless communication to complete the control of shooting process. When several sets of seismic recording

Volume 6 Issue 3, 2020
DOI: 10.6919/ICJE.202003_6(3).0013

and acquisition systems are needed to record at the same time, it is also possible to start recording from the mode of seismograph with another mode of starting from the boombox while the decoder starts explosive.

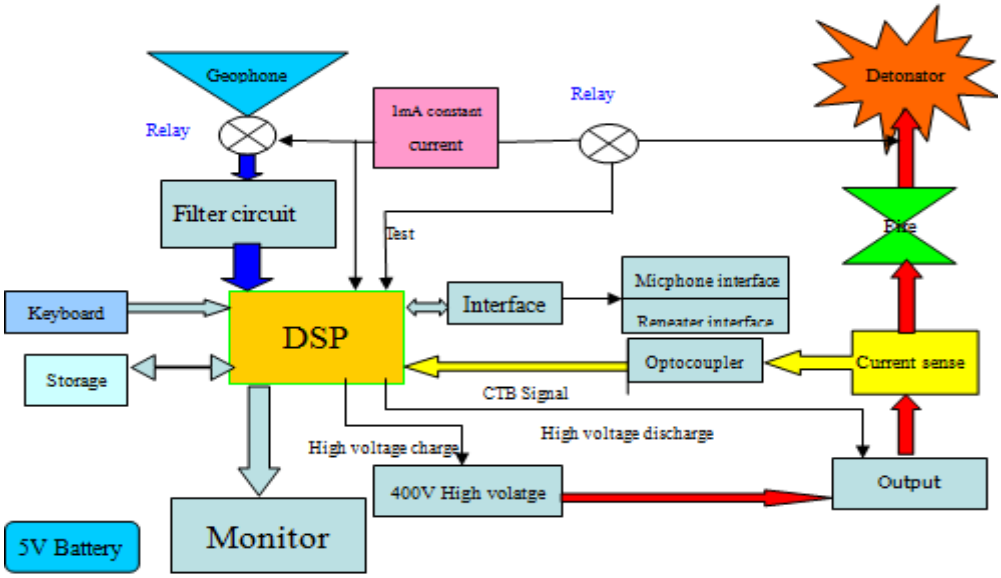


Fig.1 working principle of boombox

When Boombox works, it uses various functional units to work together according to different needs. All the different functional units can be formed by using the PC software bbview or PDA by configuring different use parameters. The working principle of the encoder is as follows: firstly, the hardware pulse is used to start the excitation program; secondly, the encoder sends the startup code by radio; secondly, the TB time break signal is sent at the end of the startup delay, and the decoder unit fires the shot at the same time; finally, the shot status report information sent by the decoder is received and displayed. The operation sequence of the encoder is shown in Fig. 2. The working principle of the decoder is as follows: first, the decoder is in the state of ready ignition when charging; second, it sends the signal of ready; then, it receives the encoder start code and detonates the detonator under high pressure; finally, it sends the shooting status message to the encoder. The operation sequence of the decoder is shown in Fig. 3. The working principle of the repeater is as follows: first, the main encoder sends the main code to the repeater, and the repeater automatically sends the standard start code to start the selected decoder; second, the decoder receives the standard start code and works in the standard decoder way; then, the detonator detonator detonates, and the repeater sends the TB time break signal; finally, the repeater sends the shooting status report of the received decoder To the encoder. The working sequence of the repeater is shown in Figure 4.

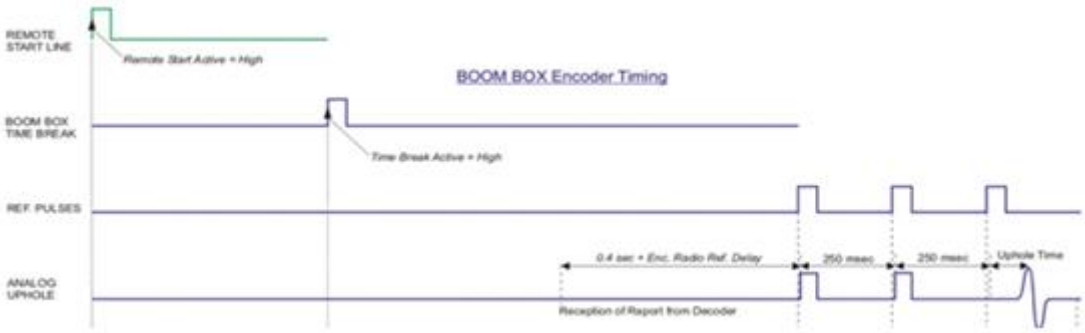


Fig. 2 working sequence diagram of encoder

ISSN: 2414-1895 DOI: 10.6919/ICJE.202003_6(3).0013


Fig. 3 working sequence diagram of decoder

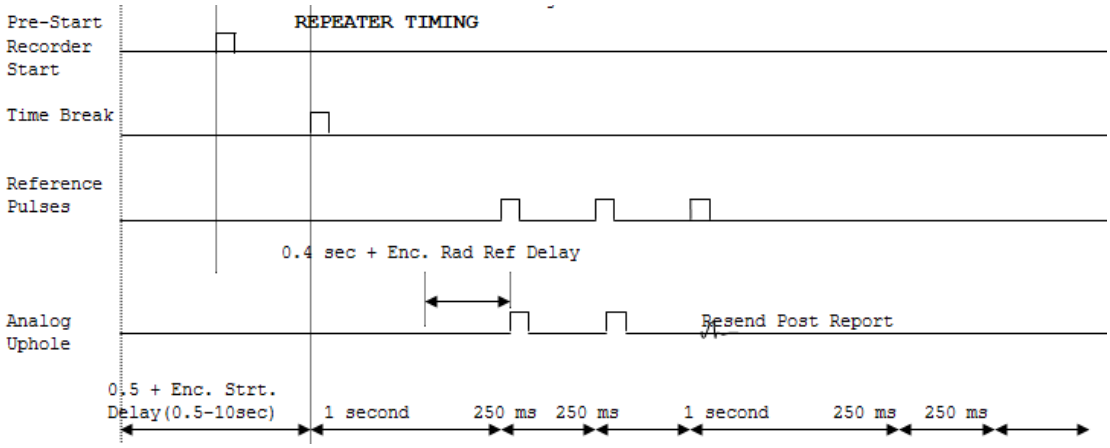


Fig. 4 working sequence diagram of repeater

## 4. Boombox fault analysis

Fault 1: detonator test failure

Fault cause: the failure of detonator test is caused by the open circuit of detonator test circuit. The reason for the open circuit of the detonator test circuit is usually that the whole detonator test circuit is short circuited due to the copper wire and other conductors connected to the detonator test terminal, and the upper panel current is too large to burn the circuit. Therefore, when Boombox is used as a decoder in the field, the detonator test terminal must not be short circuited with copper wire and other conductors. Otherwise, not only the detonator test circuit will be burnt out due to short circuit, but also other safety accidents may be caused under the power on environment.

Troubleshooting: take out the upper panel of the Boombox, and carefully observe the circuit burned by the current. In general, the connecting wires are blackened and burnt. Finding out this kind of connecting wire and welding the same kind of wire instead of burning the wire can solve this kind of maintenance problem.

Fault 2: after the Boombox is connected to the encoder system line, it is unable to change the host parameters through PDA

Fault cause: usually, the parameters can be set through PDA after the encoder and decoder are connected. However, after the encoder system line is connected to the Boombox, the PDA infrared interface and the Boombox infrared interface cannot be online, and the host parameters cannot be changed. This is because the RTI function of encoder system interface and infrared interface share the same interface. When the Boombox is connected to the encoder system line, the encoder defaults to the RTI port, while the infrared interface is disabled.

Troubleshooting: when the Boombox interface is connected to the encoder system line, the parameters can only be changed by using bbview software through the computer serial port, or by taking off the encoder system line and using the default infrared interface and then using PDA.

Fault 3: the decoder does not generate the verification CTB signal

Fault cause: the decoder does not generate the verification CTB signal, indicating that the CTB generation circuit is faulty. This situation is mostly due to circuit aging. See Fig. 5, the CTB signal of BoomBox detonation system is generated when the discharge circuit is discharged, and its circuit

ISSN: 2414-1895 DOI: 10.6919/ICJE.202003_6(3).0013

is composed of resistance RT21, resistance RT16, capacitance C83, Optocoupler IC31 and integrated circuit IC41. Where rt21 is the high-voltage sampling resistance. When the discharge circuit is discharged, the sampling resistance causes the voltage difference. After resistance rt16, it is stored in capacitance C83, which acts on pins 2 and 3 of optocoupler ic31. Pin 7 of optocoupler ic31 outputs high level and generates CTB signal. According to the oscilloscope signal, there is signal at pin 2 and 3 of ic31, but there is no output signal at pin 7 of ic31. It indicates that the fault is caused by ic31 fault.

Troubleshooting: after replacing the ic31 module, the fault is eliminated smoothly.

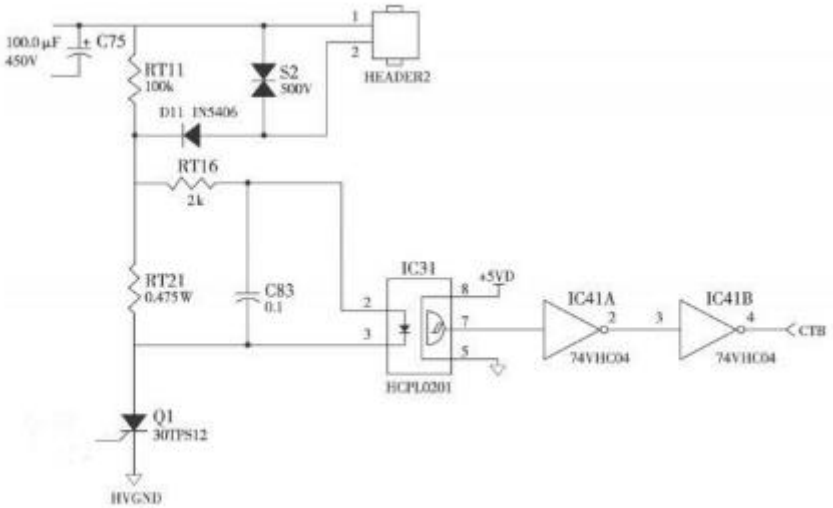


Fig.5 circuit diagram of CTB generation

## 5. Conclusion

Boombox teleblasting system is the main synchronous source teleblasting system in mountain geophysical exploration. Boombox remote explosion system is a very important part of geophysical exploration and acquisition system for a long time in the future because of its strong adaptability, small size, light weight and simple operation. Understanding its working principle and learning its fault prevention measures will provide more guarantee for the safety and smooth of field acquisition.

## References

[1] Guo Yu:Application of Boombox digital remote explosion system in seismic exploration.(Science and technology horizon ,China 2012),p.271-272. (In Chinese).

[2] Sercel. Sercel. Cmxlv8.1 user's manual.2004.

[3] Seismic source company. Boombox instruction manual. 2002.