ISSN: 2414-1895 DOI: 10.6919/ICJE.202012_6(12).0010

# Power System Load Frequency Control based on Sliding Mode Control, A Survey

Di Dong, Xihuai Wang

School of Logistics Engineering, Shanghai Maritime University, Shanghai, 201306, China.

## Abstract

**The stability of power system is often affected by the uncertainty of some parameters and load interference, The design of a sliding mode controller can effectively improve the dynamic performance of the system, improve the robustness of the system, and suppress the frequency oscillation of the system. This paper summarizes how to design sliding mode controller for single-domain power system and multi-domain power system, and hopes to provide inspiration for the next research direction.**

## Keywords

**Slidingmode control; Load frequency control; Single-domain power system; Multidomain power system.**

## 1. Introduction

In order to improve the quality and reliability of power supply, load frequency control is one of the most important issues in power system design and operation.For a power system, the load is constantly changing, and there are also interference from external factors and its own errors.In view of the frequency oscillation caused by the interference of various factors, it is necessary to design a robust controller that controls the frequency deviation for the entire power system.[1-5]

Sliding mode control is a special control method. Sliding mode control is insensitive to parameter perturbation and external interference. At the same time, the sliding mode is invariant, so sliding mode control has strong robustness.[6] Moreover, the algorithm of sliding mode control is relatively simple and easy to implement in engineering. Because of these characteristics, the application of sliding mode control in power system load frequency control is extremely wide.

## 2. The basic method of sliding mode control design

Designing a sliding mode control system can be divided into two steps:

The first is to determine the switching function, that is, the sliding surface s = 0,The sliding mode determined by it is asymptotically stable and has good quality to meet the dynamic quality requirements of the control system. The sliding mode surface represents the ideal dynamic characteristics of the system.

The second is to design a sliding mode controller to meet the reaching conditions,In other words, any point other than the sliding surface s = 0 can reach the sliding surface s = 0 within a finite time,So that the approaching motion (non-sliding mode) reaches the switching surface in a finite time, and it is fast and has little chattering during the approaching process.[7]

## 3. Design method of sliding mode controller for single domain power system

### 3.1 Design method of sliding mode controller for single domain power system

The mathematical system model of a single-domain power system is generally[8]:

ISSN: 2414-1895 DOI: 10.6919/ICJE.202012_6(12).0010

$$\Delta\dot{f} = -\frac{1}{T_p}\Delta f + \frac{K_p}{T_p}\Delta P_G - \frac{K_p}{T_p}\Delta P_d \tag{1}$$

$$\Delta\dot{P}_G = -\frac{1}{T_T}\Delta P_G + \frac{1}{T_T}\Delta X_G \tag{2}$$

$$\Delta\dot{X}_G = -\frac{1}{RT_G}\Delta f - \frac{1}{T_G}\Delta X_G - \frac{1}{T_G}\Delta E + \frac{1}{T_G}\Delta u \tag{3}$$

$$\Delta\dot{E} = -K_E\Delta f \tag{4}$$

Te physical model block diagram is shown in Figure 1.

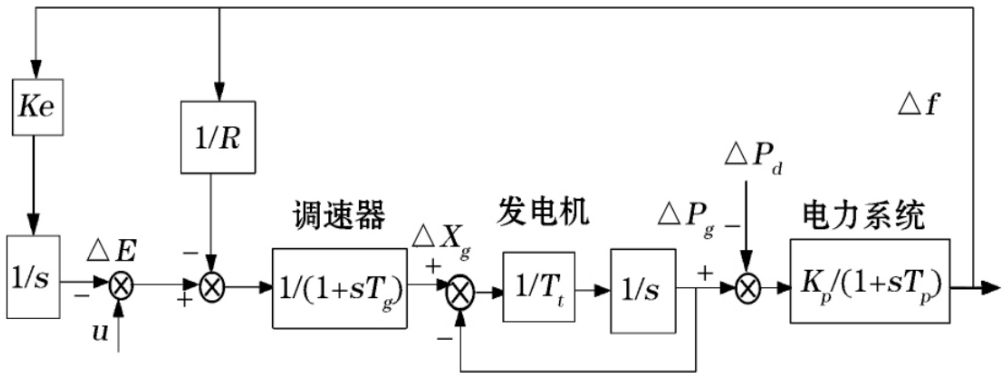


Figure 1. Block diagram of physical model of single domain power system

The above equations (1)-(4) can be expressed in the following vector form to design the controller

$$\dot{x}(t) = Ax(t) + Bu(t) + F\Delta P_d(t)$$

$$x(t) = \begin{bmatrix} \Delta f(t) \\ \Delta P_g(t) \\ \Delta x_g(t) \\ \Delta E(t) \end{bmatrix}, A = \begin{bmatrix} -\frac{1}{T_P} & \frac{K_P}{T_P} & 0 & 0 \\ 0 & -\frac{1}{T_t} & \frac{1}{T_t} & 0 \\ -\frac{1}{RT_g} & 0 & -\frac{1}{T_g} & -\frac{1}{T_g} \\ K_e & 0 & 0 & 0 \end{bmatrix} \tag{5}$$

$$B = \begin{bmatrix} 0 \\ 0 \\ \frac{1}{T_g} \\ 0 \end{bmatrix}, F = \begin{bmatrix} -\frac{K_P}{T_P} \\ 0 \\ 0 \\ 0 \end{bmatrix}$$

Among them, Δf is the incremental frequency deviation (HZ); ΔPg is the incremental change in generator output power (p.u. MW); ΔXg is the incremental change of thegovernor valve position (p.u.MW); ΔE is the integral of the incremental frequency deviation Δf; u is the control quantity; ΔPd is the load disturbance (p.u.MW); Tg is the governor time constant (s); Tt is the steam turbine time constant (s); Tp is the power system time constant (s); Kp is the power system gain; R is the governor speed adjustment (p. u. MW); Ke is the integral control gain.[9]

ISSN: 2414-1895 DOI: 10.6919/ICJE.202012_6(12).0010

### 3.2 Design of Sliding Mode Controller

Literature [10] proposed a sliding mode load frequency controller design based on constant velocity approach rate, The pole configuration is used to select a suitable switching function, so that the system has stable sliding mode dynamics. Use the following formula:

$$\dot{S} = -\varepsilon\, sgn(S), \varepsilon > 0 \tag{6}$$

The sliding mode controller satisfies the following equation.

$$u(t) = -(CB)^{-1}(CAx(t) + \varepsilon\, sgn(S) + CF\Delta P_d) \tag{7}$$

Then compare the algorithm designed by it with the traditional algorithm based on inequality approach rate, and compare the conditions of the constrained generator output and the ideal generator working state respectively. The simulation results show that, no matter in the ideal state or when receiving GRC constraints, Compared with the traditional method, the constant velocity approach rate enables the system to approach stability faster, greatly reduces chattering, has stronger robustness, and has a more obvious suppression effect on frequency deviation.

Literature [11] designed an integral switching surface based on the above sliding mode control and the integral sliding mode surface satisfies the following equation:

$$s(t) = Cx(t) - \int_0^t (CA - CBL)x(\tau)d\,\tau \tag{8}$$

Both the matrices C and L are constant matrices of $R^{1*4}$ ,The matrix L satisfies λ(A-BL)<0 and CB is a non-singular matrix, It is easy to find that when the system enters the sliding mode dynamics, s(t)=0 is satisfied, and the equivalent control Ueq(t) can be obtained by setting s(t)=0. The following system equivalents under the sliding mode dynamics can be obtained equation:

$$\dot{x} = (A - BL)x(t) + \{I_n - B(CB)^{-1}C\}f(x,t) \tag{9}$$

Finally, a simulation comparison is made through matlab, and the simulation proves that: in a single-domain power system with non-matching uncertainties, The use of integral sliding mode surface can improve the dynamic performance of the system, and can also effectively reduce the chattering and suppress the frequency deviation phenomenon when the parameters are uncertain. This method can also be developed and deepened to the frequency control of multi-domain interconnected power systems and discrete uncertain power systems.

## 4. Design method of sliding mode controller for multi-domain power system

### 4.1 Mathematical Model of Multi-domain Power System

The multi-domain power systems currently studied are mainly wind, water and thermal power. Here, the multi-domain interconnected power system with wind storage is used as a reference. The model of a multi-domain interconnected power system with wind storage is shown in the figure below:

In Figure 2: i=1,2,..., N,j = 1,2,..., N; N is the number of regions; Δfi is the frequency deviation of the regional system; ΔPmi is the output power increment of the synchronous generator; ΔPvi is the position increment of the control valve; ΔEi is the increment of the frequency deviation integral

ISSN: 2414-1895 DOI: 10.6919/ICJE.202012_6(12).0010

controller; ACEi is the zone control deviation; Δδi is the phase angle increment; ΔPESi is the action depth of the energy storage system; ΔPLi is the change in system load active power; Tpi and Kpi are the system time constant and gain; Tchi is the steam turbine time constant; Tgi is the governor time constant; Ri is the governor rate adjustment; KEi is the integral control gain; Bi is the regional frequency offset coefficient; ui is the sliding mode load frequency control value; Kbi is the unit adjustment power coefficient of the energy storage system; d1 is the time lag constant representing the energy storage system; d2 is the time delay constant of the traditional unit; Tij is the power synchronization factor of the tie line between the two regions.

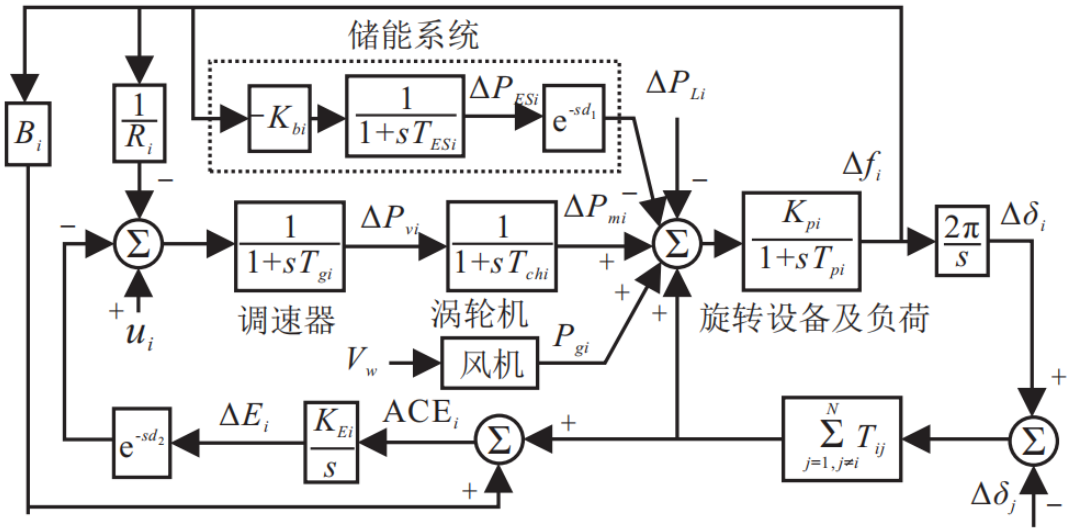


Figure 2. Multi-domain interconnected power system model with wind storage

## 4.2 Design of Sliding Mode Controller

Literature [12] designed a sliding mode controller based on a constant velocity approach rate control method for a multi-domain power system with wind storage. First, the relevant state equations are established for the interconnected power system model. Because the load in the power system is constantly changing, the power system parameters are uncertain. In order to describe the power system more accurately, it extends the equation of state to a model that includes parameter uncertain terms. The advantage of this model is that all uncertain parameters can be reflected in one equation. The shortcomings are also obvious, the amount of calculation is larger, and it is necessary to prove the stability of the state equation and whether it can slide on the sliding surface. The document also adds the frequency change under PI control for comparison. Through simulation, it can be seen that as the system load fluctuates and the wind energy permeability increases, A single frequency modulation method can no longer meet the reliability and economy of stable operation of the power system. The coordination of energy storage and sliding mode load frequency controller can effectively reduce system frequency deviation and regional control deviation; The sliding mode load frequency controller designed for the LFC model of the multi-domain interconnected power system with wind storage is insensitive to the uncertainty of the system parameters and the time delay of the energy storage system and the traditional unit control channel, thereby increasing the power system load frequency The accuracy of control enhances the robustness of the system.

Literature [13] uses a sliding mode control method optimized by particle swarm optimization (PSOSMC) for load frequency control. Different from the above-mentioned document [12], this document involves both conventional thermal power generating units and hydropower generating units in load frequency control. PSOSMC is used to control the state quantities of thermal power and hydropower to maintain the stability of various parameters. Because the selection of controller

ISSN: 2414-1895 DOI: 10.6919/ICJE.202012_6(12).0010

parameters plays a vital role in the stability of the entire system, the algorithm of conventional particle swarm optimization is improved.The two parameters of switching vector ci and feedback gain αi are modified and configured. The optimal settings of the two parameters of the sliding mode controller can be found more systematically and conveniently. The improved formula is as follows:

$$\begin{cases} v_{id}(t+1) = \omega(t) \cdot v_{id}(t) + c_1 r_1 \cdot (p_{id} - x_{id}(t)) \\ \qquad +c_2 r_2 \cdot (p_{gd} - x_{id}(t)) \\ x_{id}(t+1) = x_{id}(t) + v_{id}(t+1) \end{cases} \tag{10}$$

Through simulation verification, it can be seen that the effect of PSOSMC control strategy is compared with the pure sliding mode control method. The former can more effectively reduce the frequency deviation of the power system. The selection of parameter optimization that relies on the particle swarm optimization algorithm makes the overshoot of the control process smaller and the system responds in a faster time. The improved particle swarm optimization algorithm can make the system have better dynamic performance and stability, but also has stronger robustness, making the control performance of the entire system better.

Literature [14] adopts the load frequency control method of multi-area interconnected power system based on terminal sliding mode fuzzy neural network, This document analyzes and establishes an interconnected power system load frequency control model that takes into account the active output of multiple regions based on the characteristics of the active output of a single-region power system. The adaptive inverse control is adopted to effectively solve the contradiction between system response and disturbance suppression. The terminal sliding mode fuzzy neural network is introduced into the adaptive inverse system, and a fuzzy neural network identifier is constructed. The terminal sliding mode can be used to achieve no static error tracking in a limited time, and the recognition ability of the neural network is further improved.

Experimental simulation proves that the designed adaptive inverse system based on terminal sliding mode fuzzy neural network has reasoning ability and strong learning ability, and can quickly and accurately identify system parameter changes. Not only can a good dynamic response be obtained, but also wind power and load disturbances can be minimized. Aiming at the load frequency control problem of interconnected power systems with wind power, an adaptive inverse controller based on terminal sliding mode fuzzy neural network is designed to optimize the system response and disturbance elimination at the same time. The controller not only has adaptive ability to the changes of system parameters, but also has strong robustness to external disturbances. The disadvantage is that the implementation is slightly complicated.

The method in [15] combines the variability and controllability of equivalent inertia and equivalent damping, and proposes an adaptive robust sliding mode control strategy to improve the dynamic stability of the interconnected power system. First, give the sliding mode control rate u=us+ur+ua, Among them, us is the feedback control item, ur is the robust control item, and ua is the adaptive control item, and the following formula is given:

$$\begin{cases} u_s = \dfrac{1}{x_2}(-kx_1 + k_s s) \\ u_r = \dfrac{1}{x_2}\eta\, sgn(s) \\ u_a = \hat{\theta} C \end{cases} \tag{11}$$

Then design the adaptive law and derivate the Lyapunov function to obtain:

ISSN: 2414-1895 DOI: 10.6919/ICJE.202012_6(12).0010

$$\dot{V} = \theta s\dot{s} + \frac{1}{\gamma}\tilde{\hat{\theta}}\dot{\theta} = s\left(\theta C x_2 + \theta C\dot{x}_2\right) + \frac{1}{\gamma}\tilde{\hat{\theta}}\dot{\theta} =$$

$$s(\theta C x_2 - k x_1 - u x_2 + \omega) + \frac{1}{\gamma}\tilde{\hat{\theta}}\dot{\theta} \tag{12}$$

Finally, the sliding mode control rate and adaptive law of equation (11) will be substituted back to equation (12) to obtain:

$$\dot{V} = -k_s s^2 - \eta|s| + \omega s \leq -k_s s^2 \leq 0 \tag{13}$$

From equation (13), it is known that the rotor motion system of the synchronous generator set with uncertain equivalent inertia coefficient can be asymptotically stable under the action of sliding mode control law and adaptive law, and the system frequency can track the desired rated synchronous angular frequency. Finally, simulation can verify that compared with the traditional virtual inertia control method, the proposed control strategy can better suppress the frequency oscillation, reduce the frequency change rate and the relative power angle oscillation amplitude. The disadvantage is that it cannot eliminate the chattering well.

Literature [16] studies the tuning and optimization of sliding mode controller parameters. In the design of sliding mode control, sliding mode surface parameters are an important factor that affects the control effect. In the process of control law design, it takes many attempts to adjust the parameters. In the control process of conventional sliding mode variable structure control, once the parameters are determined, they cannot be adjusted, and the Lyapunov function can only determine the lower limit of each parameter, and cannot obtain the appropriate value of the parameter. Literature [16] adopted the Actor-Critic learning algorithm, and designed two networks of Actor and Critic on the basis of inheriting the DQN method. Among them, the Actor network is used for policy estimation, and the Critic network is used for value function estimation, which can better deal with continuous control problems structurally. The final study also verified this idea. Using the Actor-Critic learning algorithm, a sliding mode control strategy was designed for a class of multi-order affine systems, which made the system converge exponentially. It can reduce the blindness of control parameter setting and effectively improve the dynamic performance of the system. In the actual use of the online tuner, the general parameter adjustment method is generally used to obtain preliminary parameter values, and then the parameter is used as the starting parameter, and the online tuner is used to optimize the parameters.

## 5. Conclusion

This article mainly outlines the sliding mode control methods of single-domain and multi-domain power systems. The above methods have their own advantages and limitations.For specific problems, it is necessary to analyze and select appropriate methods, or combine various methods to complement each other, in order to perform appropriate sliding mode control on the entire system.With the development of technology, the sliding mode variable structure control method can be more in-depth and more widely used in interconnected power systems.

## References

[1] Yuan R, Jing Z, Chen L. Uniform asymptotic stability ofhybrid dynamical systems with delay[J]. IEEE Trans onAutomatic Control, 2003, 48(2): 344-348.

[2] Sun X M, Zhao J, Hill D J. Stability and L2-gain analysis for switched delay system: A delay-dependent method[J]. Automatica, 2006, 42(10): 1769-1774.

ISSN: 2414-1895 DOI: 10.6919/ICJE.202012_6(12).0010

[3] Geromel J C, Colaneri P. Stability and stabilization of continuous-time switched linear systems[J]. SIAM J of Control Optimization, 2006, 45(5): 1915-1930.

[4] Feng X, Loparo K A, Ji Y, et al. Stochastic stability properites of jump linear systems[J]. IEEE Trans on Automatic Control, 1992, 37(1): 38-53.

[5] Young H M,Heon S. Extended integral control for load frequency control with the consideration of generation -rate constrains[J]. Electrical Power and Energy Systems,2002,24: 263-269.

[6] Gao W B, Wang Homaifa A. Discrete-time variable structure control systems[J]. IEEE Trans on Industrial Electronics, 1995, 42(2): 117-122.

[7] Liu Jin-kun. Sliding mode variable structure control MATLAB simulation[M]. Beijing:Tsinghua University Press, 2005.

[8] Wang Y, Zhou Z, Wen C. Robust load-frequency controller design for power systems[J]. IEE Proc Part C, 1993, 14(1):11-16.

[9] Xue Changfe. Robust control of power laod frequency sys- tem[D]. hengyang: Northeastern University, 2000.

[10] MI Yang, PAN Da, WU Xiao, JING Yuan-wei, ZHU Wang-qing. The Research of Sliding Mode Load Frequency Control Strategy Based on Constant Reaching Law[J]. Control Engineering of China, 2014, 21(3).

[11] MI Yang, WU Xiao, CHU Ying, LI Zheng-hui, Load frequency control for one area power systems based on sliding mode control.[J]Control and Decision, 2012, 27(12).

[12] MI Yang, HAO Xue-zhi, LIU Hong-ye, ZHANG Heng-yi, LI Zhan-qiang, JI Hong-peng.Multi-area power system with wind power and energy storage system load frequency control based on sliding model control [J]. Control and Decision,2019,34(2)

[13] SUN Jie, GENG Rui, DU Zhe, LI Ran. Load frequency control of mult-area interconnected power system with wind power.[J]Modern Electronics Technique, 2019,42(21).

[14] WU Zhong-qiang, ZHANG Wei. Research on load frequency control of power system based on terminal sliding mode fuzzy neural network. [J]Fuzzy Systems and Mathematics, 2019,33(5).

[15] YANG Tao, LIAO Yong, TANG Meng-yang, Adaptive robust sliding mode control strategy for improving stability of interconnected power system with virtual inertia of wind farm[J]. Electric Power Automation Equipment, 2020,40(9).

[16] SONG Shiyuan, HU Jianbo, WANG Yingyang, HAN Linxiao.Actor-Critic Learning Algorithm for Parameter Tuning of Sliding Mode Controller[J]. ELECTRONICS OPTICS & CONTROL, 2020,27(9).