International Core Journal of Engineering Volume 6 Issue 11, 2020
ISSN: 2414-1895 DOI: 10.6919/ICJE.202011_6(11).0037

Fiber Optic Anti-magnetic Anemometer

Xinqi Liang[1,a], Zheng Xiong[1,b], Yazheng Liu[1,c], Yang Qu[1,d],
Wenliang Bi[1,e], Haiting Di[1,f]

[1]College of Engineering & Technology, Northeast Forestry University, Harbin 150040, China.

[a]44713580@qq.com, [b]zhengx@163.com, [c]yazheng2015@163.com, [d]quyang@nefu.edu.cn, [e]wenliang@sina.com, [f]dht@nefu.edu.cn

Abstract

Wind speed measurement in forestry, agriculture, industry and other fields have an inestimable role. Traditional anemometers have some problems, such as low monitoring sensitivity, sensitivity to external environment interference, poor structural stability and high price. In this paper, a wind speed measurement structure is designed. Optical fiber sensor is used to transmit the sensing signal. In this way, the remote transmission and monitoring of wind speed can be realized, which has the characteristics of anti-magnetic explosion. The anemometer can not only be used in agriculture, forestry, meteorology, civil aviation,bridges and other fields, but also can work in flammable and explosive environment. Therefore, is has more advantages when it is used in the natural gas, underground coal mine and other special occasions of the wind speed monitoring.

Keywords

Optical fiber, Wind speed measurement, Anti-magnetic, Anemometer.

1. Introduction

The research of wind energy is of great significance to the improvement of the quality of human life, which requires us to have better methods to monitor wind, so as to make better use and research of wind energy. With the help of wind power, accurate wind parameters need to be measured first. At present, more and more attention is paid to the observation and research of wind parameters around the world. Among them, the magnitude of wind speed has the greatest impact on human activities and has always been one of the most important parameters. Therefore, wind speed measurement technology has attracted more attention.

According to the different working principles, the common wind speed sensors can be divided into mechanical rotary anemometers [1,2], ultrasonic anemometers based on acoustic principles [3, 4], and thermal wind speed sensors [5-7] and so on. However, the existing technical means will exist to varying degrees when monitoring wind speed (1) Low monitoring sensitivity; (2) More sensitive to external environmental interference, serious signal attenuation, and low resolution; (3) Poor structural stability and difficult to repair; (4) The system is complicated and expensive. Optical fiber sensing technology represents the development trend of a new generation of sensors. It has been recognized as one of the most promising high-tech industries at home and abroad. It has high sensitivity, fast response, anti-electromagnetic interference, simple structure, and easy to form a telemetry network. However, traditional optical fiber sensors based on phase detection technology or frequency detection [8] technology have high detection accuracy but are expensive, and the system is complex. Therefore they are not suitable for wind speed monitoring systems. Optical fiber sensors based on intensity modulation, although It has the advantages of simple structure and low price, the sensitivity is low, and it is difficult to meet the accuracy requirements of wind speed monitoring.

ISSN: 2414-1895 DOI: 10.6919/ICJE.202011_6(11).0037

Based on the above background, this article researches the mechanism design and sensor assembly scheme of the anti-magnetic and explosion-proof anemometer based on optical fiber sensing technology, and finally realizes the identification and monitoring of wind speed physical quantity. It has the characteristics of low cost, good linearity, high sensitivity, and strong ability to resist environmental interference, which can effectively solve the problems existing in wind speed monitoring by known technical means.

2. Main Structure and Measuring Principle of Anemometer

2.1 Main Structure of the Anemometer

Aiming at the functions that the anemometer needs to realize, the new anti-magnetic and explosion-proof anemometer designed in this paper is shown in Fig.1. The main components are wind cup, optical transmitter drive circuit, optical transmitter, optical fiber, optical fiber collimator, bearing support base, optical receiver, signal processing system and block disc.

A pair of optical fiber collimators are fixed on the optical fiber collimator bracket, and the optical fiber devices are in an aligned state. One collimator can receive the light emitted by the other collimator; the wind cup is fixed on the rotating shaft; the optical disc is blocked It is fixed on the rotating shaft, and the blocking disc is located between two fiber collimators. The disc is disc-shaped, and a plurality of light barriers sheets at equal intervals are arranged on its circumference, as shown in Fig. 2.

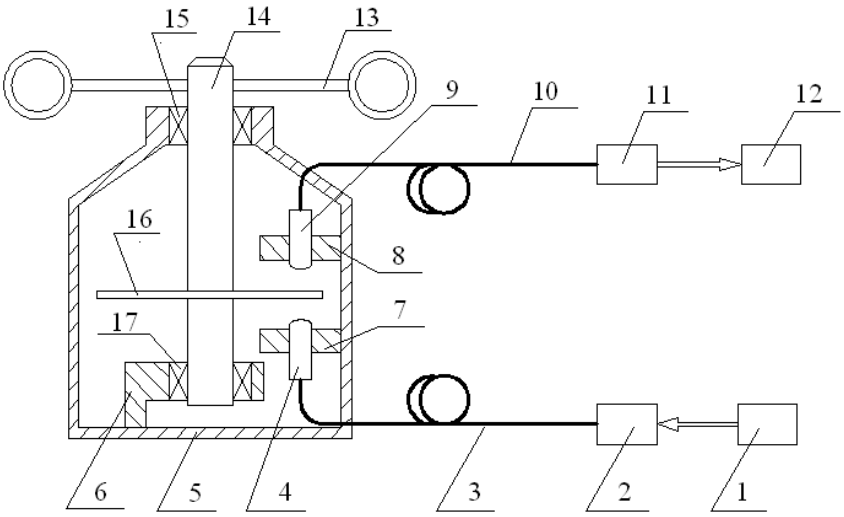

Fig. 1 Schematic diagram of the structure of the wind speed detection device

1-Optical transmitter drive circuit; 2-Optical transmitter; 3-Optical fiber; 4-Optical fiber collimator; 5-Box; 6-Bearing support seat; 7-Optical fiber collimator bracket; 8-Optical fiber collimator bracket; 9-Optical fiber collimator; 10-Optical fiber; 11-Optical receiver; 12-Signal processing system; 13-Wind cup; 14-Rotating shaft; 15-Bearing; 16-Blocking disc; 17-Bearing.

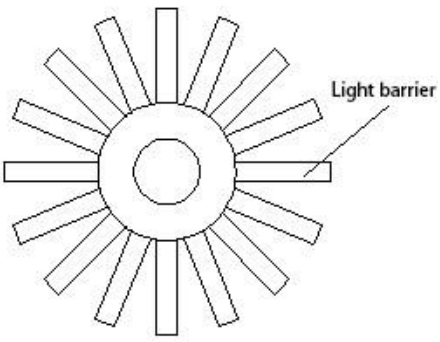

Fig. 2 Schematic diagram of the disc structure

ISSN: 2414-1895 DOI: 10.6919/ICJE.202011_6(11).0037

2.2 Measuring Principle of Anemometer

The light source used in the thesis is an LED red light source, and the light receiver is a phototransistor. After the light source is driven by the driving circuit, it sends out a light signal with stable intensity. The light source is coupled with the optical fiber, and the optical fiber transmits the optical signal to the optical fiber collimator. After receiving the optical signal, the other collimator transmits the light to the optical receiver through the optical fiber.

When the anemometer measures the wind speed, the wind acts on the wind cup and generates a force on the wind cup. The wind causes the wind cup to rotate, and the wind cup drives the shaft to rotate, which in turn drives the blocking disc to rotate; Two equally spaced light barriers, during the process of blocking the rotation of the optical disc, the light barriers will block the optical fiber collimator from receiving the light emitted by another optical fiber collimator at intervals, and the interval time is inversely proportional to the rotation speed of the optical disc. The optical receiver converts the output optical signal into an electrical signal, and performs operational amplifier and filtering processing on the electrical signal through a signal processing system, so as to achieve the purpose of measuring wind speed. Then the frequency of the received optical signal is proportional to the wind speed, and the magnitude of the wind speed can be obtained by monitoring the frequency or period of the received optical signal.

3. Light Source Drive and Signal Processing Circuit

The light source used in the paper is LED. After the light source is driven by the driving circuit, it sends out light signal with stable intensity. The light source is coupled to the optical fiber, which transmits the light signal to the optical fiber collimator. Since the light intensity of LED is greatly affected by temperature and current, the LED needs to be modulated.

During the experiment, the modulated light is output after the light source is modulated by pulse frequency. The voltage analog signal converted by the photosensitive audion is amplified by the operational amplifier circuit and then output to the data acquisition card after band pass filtering. The light source driver and signal processing circuit are shown in Fig. 3.

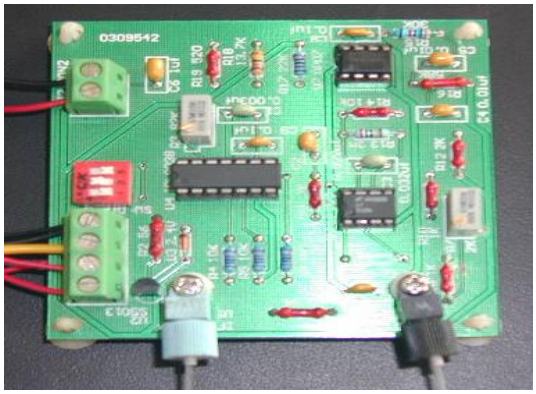

Fig. 3 Light source driver and signal processing

4. Experiments

According to the light source driving and signal processing circuit diagram, the parameters of each component in the system are calculated in detail, the corresponding components are selected, the actual circuit board is made, and the anemometer is built and made. After we've connected the pieces, we could do the experiment.

It is found that the frequency of receiving light is proportional to the wind speed. The faster the frequency of the optical signal changes, the higher the wind speed. In addition, the minimum wind speed that can be detected by the anemometer is 0.7m/S. When the wind speed is lower than the wind speed, it cannot be detected by the anemometer.

ISSN: 2414-1895 DOI: 10.6919/ICJE.202011_6(11).0037

Compared with the mature anemometer (models for UT363) on the market, the precision experiment of the precision instrument designed in this paper is carried out. The results show that the error of this anemometer can be controlled within 4.8% within the measurement range of network speed of 0.7m-10m/s.

5. Conclusion

The fiber based anemometer studied in this paper can not only be used in agriculture, forestry, meteorology, civil aviation, bridges and other fields, but also has more obvious advantages in wind speed monitoring in special occasions such as natural gas, underground coal mines.

Acknowledgements

This work is supported by Heilongjiang Provincial Natural Science Foundation of China (LH2019F003) and the Undergraduate Training Program for Innovation and Entrepreneurship (202010225100).

References

[1] M. Xu, Q.C. Zhu: Design of wind direction and speed measurement system, Meteorological, Hydrological and Marine Instruments, (2008) No.4, p.5-10. (In Chinese)

[2] Z.H. Zhou: Characteristics analysis and experimental research on the three-cup anemometer, Harbin Institute of Technology, 2007. (In Chinese)

[3] D. Han, S. Kim, S. Park: Two-Dimensional Ultrasonic Anemometer Using the Directivity Angle of An Ultrasonic Sensor[J]. Microelectronics Journal, Vol.39 (2008) No.10, p.1195-1199.

[4] W.L. Du, X.P. Tan: Design of Low-Power Ultrasonic Wind Sensor, Measurement & Control Technology, Vol.32 (2013) No.09, p.12-15. (In Chinese)

[5] Y.X. Shen, Z.A. Tang, H.Q. Zhang: Study of hot wire sensor, Journal of Transducer Technology, (2004) No.5, p.15-18. (In Chinese)

[6] K. Yang: Research on algorithms of power consumption control and thermal drift compensation based on MEMS thermal wind sensor. Southeast University, 2016. (In Chinese)

[7] S.B. Hu: Algorithm research and related designing based on MEMS folw sensor, Southeast University, 2015. (In Chinese)

[8] J. Wang, Z. Liu, H. Tam: Fiber optic anemometer based on metal infiltrated microstructured optical fiber inscribed with Bragg grating. International Conference on Optical Fibre Sensors, (2015), 96341M.