ISSN: 2414-1895 DOI: 10.6919/ICJE.202011_6(11).0022

Design and Debugging of Hydraulic Circuit Based on FESTO for Component Assembly Device

Yanjun Yu[1,a], Fuyu Gong[1,b] and Yinghao Xiong[1,c]

[1]College of Logistics Engineering, Shanghai Maritime University, Shanghai, 201306, China.

[a]yuyanjun97@163.com, [b]15956659949@163.com, [c]18162350177@163.com

Abstract

The main contents of hydraulic system design and calculation include clear design requirements to analyze the working condition, determine the main parameters of the hydraulic system, draw up the schematic diagram of the hydraulic system, calculate and select the hydraulic components and check the performance of the hydraulic system. Based on the initial conditions of the hydraulic system of the assembly device, the design and calculation of the hydraulic system are carried out.

Keywords

Hydraulic system design, Hydraulic system calculation, Components.

1. Introduction

Hydraulic function is various, can be used as a kind of control mode, hydraulic control, also can be used as a power transmission mode. The hydraulic system converts mechanical energy into pressure energy, and then converts pressure energy into mechanical energy, which is called hydraulic transmission. A complete hydraulic system can be divided into five parts, divided into power components, control components, actuators, auxiliary components and hydraulic oil. The power element is the hydraulic pump. Hydraulic pump can convert the mechanical energy or kinetic energy of the prime mover (motor) into pressure energy, which plays the role of power source in the loop of the entire hydraulic system. The actuator is the hydraulic cylinder or hydraulic motor, which can convert the pressure in the hydraulic oil into kinetic energy, generally into rotary motion or reciprocating linear motion. Control element namely all sorts of hydraulic control valve, can control the pressure of fluid flow in hydraulic system, the direction of flow, the size of flow, so as to meet the expected work requirements or purpose. There are many types, functions and styles of hydraulic auxiliary components, such as pipes, seals, pressure gauges, oil tanks, filters, etc. Hydraulic oil is the working medium to transfer energy in hydraulic system, which converts mechanical energy into pressure energy of hydraulic oil.

2. Load and motion analysis

A working cycle of part assembly device includes three processes: fast forward, work forward and fast backward . According to different working stages, the hydraulic system circuit parameters of the parts and equipment are different. The size of the assembly force determines the workload. Static friction force and dynamic friction force are determined by the influence of gravity and friction coefficient of moving parts. According to the initial conditions, the main structural dimensions of the actuator (hydraulic cylinder) can be determined d, D.

ISSN: 2414-1895 DOI: 10.6919/ICJE.202011_6(11).0022

3. Determine the main parameters of the hydraulic system

According to the design requirements, the hydraulic system is divided into three stages: fast forward, working forward and fast backward. At this point the parts of the equipment in the work by the maximum load, in addition to the friction and parts of the assembly resistance. In the fast forward and fast backward state only friction is applied.So the load is small. Primary hydraulic cylinder working pressure according to maximum load.

In the part assembly device, the fast forward and fast backward speeds are generally approximately equal. The single piston rod type differential hydraulic cylinder (A_1=A_2) can be used here, and the area of the rod cavity is A_1 and the area of the non-rod cavity is A_2. The hydraulic cylinder adopts differential connection when fast forward. When the workpiece is assembled, the damage will cause the load to disappear suddenly and the forward impact will occur. The return oil chamber of the hydraulic cylinder should have back pressure. The operating pressure is P_1, the back pressure is P_2, and the η_{cm} is the mechanical efficiency of the hydraulic cylinder.

$$A_1 = \frac{F}{\eta_{cm}(p_1 - \frac{p_2}{2})} \tag{1}$$

After calculating the area of the rod cavity, according to GB/T 2348-1993, select the preferred cylinder inner diameter and piston rod outer diameter size. According to the outside diameter and inside diameter, the actual effective area of the two cavities of the hydraulic cylinder is calculated. When the area and pressure are known, the working pressure, flow rate and power under different working conditions can be calculated.

4. Develop schematic diagram of hydraulic system

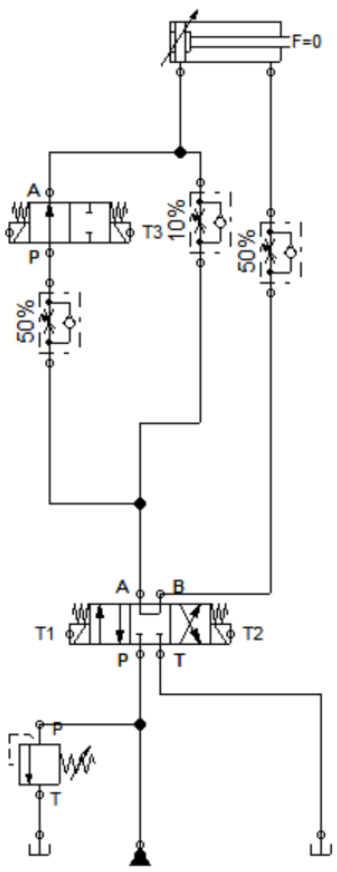

Fig 1. The schematic diagram of the hydraulic system before modification

ISSN: 2414-1895 DOI: 10.6919/ICJE.202011_6(11).0022

The characteristics of the hydraulic system movement required for the assembly of hydraulic components are obvious. Hydraulic circuit actuators do not need to be very fast. In fast forward and fast backward, hydraulic system workload is very small. The working load (resistance of assembly parts) is the main resistance load. The values are relatively large and vary little. So choose to use throttle control loop. The system is an open circulation system.

In the working cycle, the hydraulic cylinder requires the oil source to provide fast forward, fast backward stroke of low pressure and high pressure and low flow of oil in the working process. In the same working week in different stages, the hydraulic cylinder of hydraulic oil requirements are different, and the gap is very big. In fast forward and fast backward, the hydraulic cylinder requires the oil source to provide low pressure and large flow of oil. In the process, the hydraulic cylinder requires the oil source to provide high pressure and small flow of oil. Most of the time at high pressure and low flow. In order to improve system efficiency and save energy, double vane pump scheme can be chosen. Because the hydraulic impact is large when the flow is abrupt, the working stability of the double vane pump scheme is good. The double vane pump scheme can supply oil to the hydraulic cylinder at the same time to realize fast movement. Finally, the double vane pump scheme is selected.

Since the flow rate and flow rate of the return circuit change greatly during the transition from work to fast retreat, the electro-hydraulic reversing valve type reversing circuit with adjustable reversing time is selected to reduce hydraulic impact.

By combining the selected hydraulic basic circuits, the initial hydraulic circuit can be obtained.

After modification and improvement, you can get a complete hydraulic system working principle diagram. According to the simulation situation, then modify and improve the hydraulic system.

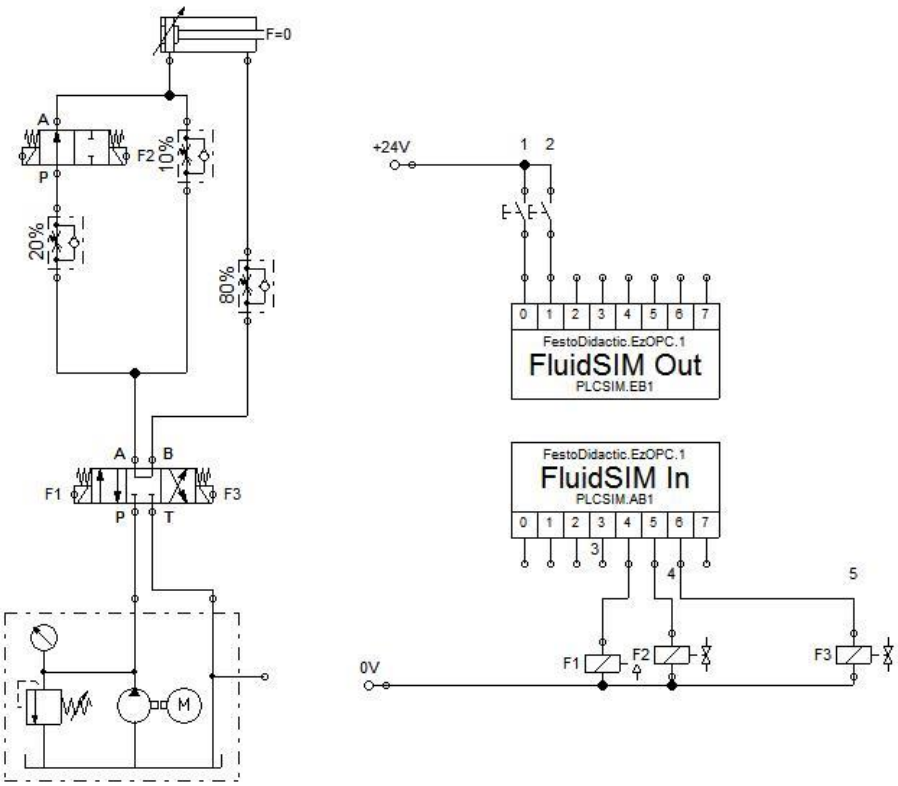

Fig 2. PLC control hydraulic system

5. Calculate and select hydraulic components

In fast forward and work forward, small flow pump to hydraulic cylinder oil supply. The hydraulic cylinder works at the maximum pressure on entry. In the speed regulating valve inlet throttling circuit, the total pressure loss will be generated on the oil inlet road. The reliable operation of the pressure

ISSN: 2414-1895 DOI: 10.6919/ICJE.202011_6(11).0022

relay requires a certain pressure difference. According to the working condition of small flow pump, the maximum working pressure of small flow pump can be estimated.

The large flow pump only supplies oil to the hydraulic cylinder when fast forward and fast backward. According to the selected hydraulic components, the working pressure of the hydraulic cylinder can be calculated at the time of fast retreat and the working pressure at the time of fast forward. The inlet oil does not pass the speed regulating valve when the fast retraction, and the pressure loss of the inlet oil line is smaller than the former. The total pressure loss on the inlet line can be estimated at 3.0MPa. The maximum operating pressure of a large flow pump can be estimated.

In addition to the maximum working pressure, also need to calculate the hydraulic pump flow and specifications. Motor power must also be calculated. In addition to hydraulic pumps and motors, there are many components and accessories to be calculated. After working out the parameters, consult the product sample, and select the valve components and accessories specifications.

6. Check the performance of hydraulic system

As the piping layout of the system has not been determined, the system pressure loss can only be estimated. In the estimation, the flow state of the liquid in the pipeline is first determined, and then the total pressure loss under various working conditions is calculated. Since input takes up a large part in the whole working cycle, the heating and temperature rise of the system can be calculated according to input working conditions. Finally, judging whether it is necessary to set a cooler according to the oil temperature.

7. Conclusion

After designing a complete working schematic diagram of the hydraulic system, calculate and select hydraulic components. The last item is to check the performance of the hydraulic system and the design of the hydraulic cylinder. After the completion of the above work, the design and commissioning of the hydraulic circuit is basically completed.

References

[1] HE Qing-Hua, P Hao, DQ Zhang. Modeling and parameter estimation for hydraulic system of excavator's arm [J].《Journal of Central South University (The English version)》. 2008.15 (3) :382-386.

[2] Mário Maia Neto Luiz Carlos Sandoval Góes .Use of LMS Amesim® model and a bond graph support to predict behavior impacts of typical failures in an aircraft hydraulic brake system [J],《Journal of the Brazilian Society of Mechanical Sciences and Engineering》, 2018.

[3] Junping Hu, Kejun Li. Thermal-hydraulic modeling and analysis of hydraulic system by pseudo-bond graph [J]. Journal of Central South University (The English version)2015. (7).

[4] Kong Qinghua Liu Jinhao Lu. Huaimin, Hydraulic drive and control system of the cone collecting robot [J]. JOURNAL OF FORESTRY RESEARCH.1999. (4).

[5] B Jing, Z Luo, X Zhu, L Dong .Shift hydraulic system modeling and simulation base on power bond graph International Conference on Computer[J] . 2010 .5 :111-114.

[6] Zuo Jianming. Hydraulic and pneumatic transmission [M]. Machinery Industry Press. 2007:1-115.

[7] Wei Li. Application of Hydraulic Mechanical Transmission Control System in Machinery Manufacturing [J]. World Nonferrous Metals. 2018-09-29.

[8] Zhaozhou Sheng. Development and Application research of Hydraulic Transmission Technology [J]. Equipment Management and Maintenance. August 25, 2018.