ISSN: 2414-1895 DOI: 10.6919/ICJE.202001_6(1).0031

Design and Implementation of On-Board Audio System's Source Node Based on INICnet

Zhanwei Liang [1, a], Feng Yi[1, b], Yulei Zhang[1, c] and Tianci Long[1, d]

[1] Chongqing University of Posts and Telecommunications, Chongqing 435000, China;

[a]liangzw@cqupt.edu.cn, [b]fengfy22@163.com, [c]635683142@qq.com,[d]283943122@qq.com

Abstract

In view of the fact that nodes in the current car audio system need to participate in network layer protocol analysis, which leads to difficult design and high hardware cost, this paper designs the source node of car audio system based on INICnet network, combined with the network characteristics of INICnet, the hardware of INICnet network. The interface realizes the structural design. The UNICENS centralized protocol stack is configured in the Linux operating system environment, and the data communication of the source node is realized by UTP unshielded twisted pair. The actual results show that the audio source node design based on the INICnet network completes the synchronous data transmission on the basis of the initial configuration of the peripheral circuit of the node, which provides the possibility of supporting high-speed packet data communication and reduces the hardware cost.

Keywords

Audio System, INICnet, Synchronous Data, UNICENS Protocol Stack.

1. Introduction

In 2018, the special analysis report on the status quo and trend of China's car audio market development pointed out that the demand for car audio has changed fundamentally, with the landing of intelligent network technology. Car audio system requires a more flexible solution to transmit the data packets, data streams and control information. At present, most of the high-end cars use the Media Orient System Transport (MOST) network to complete the in-car transmission of audio and video[11]. As a platform for the current in-vehicle infotainment system, MOST network is a standard for automotive digital multimedia bus. However, MOST bus uses optical fiber as the transmission medium, doesn't support the plug-and-play mode of the device, it has poor flexibility and cannot be realized, high-speed packet data communication, high cost, inability to support system updates, and network connectivity issues have not been universally applied to automotive infotainment systems.

So far, at the end of 2018, Microchip released Intelligent Network Interface Control Networking Technology, also known as Ring-EthernetTM, it solved Problem with all data types being transmitted simultaneously on one data line, including audio, video, control and Ethernet[4]. The UNNICENS (Unified Centralized Network Statck) protocol stack is configured into the network master node to complete network initialization for all slave nodes to shorten the node development cycle[2]. At present, there are few domestic research results on INICnet technology. Qiu Sushi of Shanghai Jiaotong University integrates the UNICENS protocol stack on the basis of MOST network, which realizes remote control of slave nodes through MOST control channel, and directly implements on MOST protocol and the principle of the protocol stack[1]. Zhang Yongliang and others of Jilin University, based on the analysis of MOST network transmission principle and INIC characteristics,

ISSN: 2414-1895 DOI: 10.6919/ICJE.202001_6(1).0031

proposed and implemented the MIT audio network design scheme based on INIC, but did not combine the new characteristics of the current INICnet network[5, 6, 7].

Therefore, this paper designs the hardware and software of the source node of the car audio system based on INICnet, By configuring the centralized protocol stack in the source node and replacing the original fiber transmission with UTP unshielded twisted pair, the unified management of the audio node is achieved. At the same time, packet data communication is realized, and the hardware cost is reduced.

2. INICnet Network Principle

2.1 INICnet Network Frame Structure

In the INICnet network, communication is achieved using a typical ring topology, the nodes can be ordered in any order while maintaining network functionality. The INICnet data rates are currently 50 Mbps and 150 Mbps respectively. The data information is transmitted in a frame format, and the same data segment of the information frame is continuously transmitted on the bus to constitute a data channel of such information, the INICnet network channel includes control data channel, packet data channel, and streaming data channel, so-called data Transmission which embodied in the INICnet network, is the exchange of data between nodes through channels according to the protocol. Control data channels are used for network and system related management and control, by exchanging commands and control messages; packet data channels are used for ethernet packets or the transmission of asynchronous packets; streaming data channels are for multiple audio and The video stream is supported for transmission; the INICnet network defines 128-byte and 384-byte data frame lengths at the data link layer, the network bandwidth is approximately 50 Mbps and 150Mbps based on a constant 48 kHz data sampling frequency. The following figure is the data frame transmission format of INICnet in different data domains:

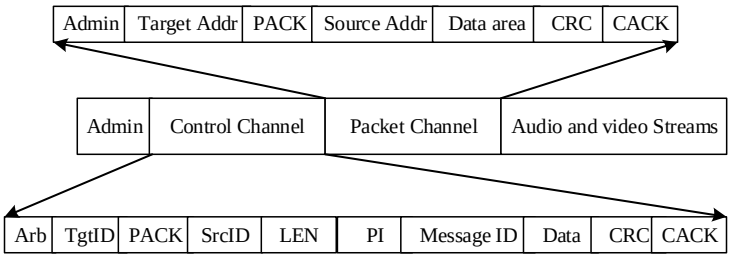

Figure 1. INICnet data frame transmission format

2.2 INICnet network topology

The INICnet network continues the MOST network topology and uses logical ring structure to achieve end-to-end data transmission. The logic ring can usually be visualized as a physical ring structure[7]; as shown in the figure, the INICnet-based car audio system is implemented based on the logical ring structure.

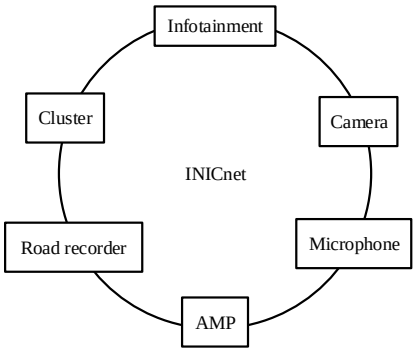

Figure 2. INICnet logic ring

ISSN: 2414-1895 DOI: 10.6919/ICJE.202001_6(1).0031

The INICnet network is a synchronous network in which a common clock is allocated between nodes of the system, the clock synchronization process of all devices in the network is as follows: the clock master node device transmits data at a rate of 48 kHz in a continuous data frame which is the same as audio sample rate, the clock master node runs a continuous bit stream to provide a stable clock signal for the entire network and form a stable lock, at this time, the system state is called a "locked state";

3. INICnet Hardware Design of SourceNode Based on INICnet

3.1 INICnet Source Node Hardware Structure Design

The hardware design of the INICnet-based car audio system designed in this paper adopts the modular design idea. In order to view the network data flow, the debugging node is added in addition to the source node design of the car audio system, and the data stream is viewed through the K2L simulation tool OptoLyzer Studio to verify the correctness of the audio transmission signal, and used to observe the INICnet network message. The source node hardware circuit of the INICnet network audio system designed in this paper mainly includes external controller module, audio input and output module, power management module and INICnet network interface module.

The audio input and output module is mainly composed of audio coding and decoding chip, which is responsible for collecting and playing audio signals. The INICnet network interface module is mainly composed of a transmitter, which is responsible for connecting the audio source node to the INICnet network, and the power module is responsible for providing the voltage of the entire node, the external controller is responsible for the management of the entire node, and through the I2C bus with the INICnet, audio decoding and encoding chip necklace to achieve their control.

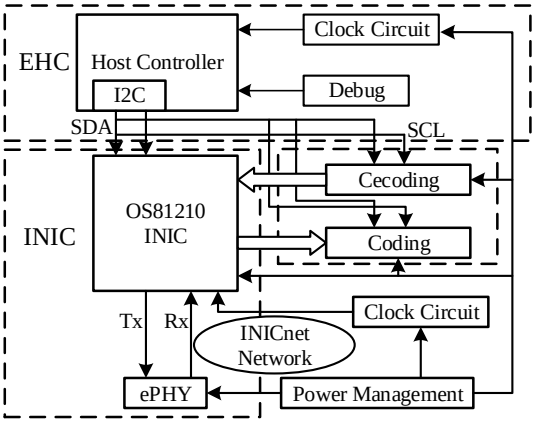

Figure 3. block diagram of the source node hardware

3.2 I NIC Design of Network Interface Module

When transmitting data to the network, the network port receives data bytes from the INIC processor, scrambles the data to reduce data-related jitter, adjusts the signal for transmission over UTP, and transmits the encoded bit stream to ETXP/ETXN[15]. These pins are driven by an internal digital-to-analog converter that drives the low-pass filtering port of the bit stream by supplying current to an external load resistor, the ETXP/ETXN pins is connected to the Ethernet physical layer transceiver front-end circuitry, the latter provides an analog low-pass filter. When OS81210 receives a serial network bit stream at ERXP/EXRN, it converts the differential input to a single-ended signal. The network port detects the preamble in the received bit stream, and Detects transmission errors and works with the clock manager to recover the clock from the bit stream[10]. The network port then decodes and descrambles the bit stream and then sends the network data as a data byte to the INIC processor.

ISSN: 2414-1895 DOI: 10.6919/ICJE.202001_6(1).0031

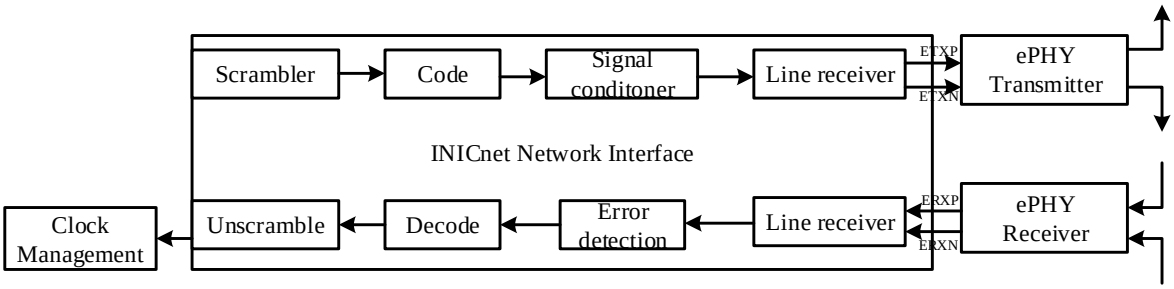

Figure 4. Audio source node output port design

3.3 Audio Data Input and Output Design

OS81210 is a dedicated processor for audio and video data transmission. The internal structure uses the I2S bus protocol to connect the audio data coprocessor and the codec device, since the connection mode of the I2S bus ensures the transmission of high quality audio data, INICnet is reflected in the high-quality data transmission capability. This article uses CS8414 as the audio decoding chip, which can encode the received differential data (S/PDIF format audio data) into a data format that can be recognized by the audio DAC conversion chip (Such as IIS format)[8][9]. Port pins SCK, FSYNC, and SDATA are connected to the interface pins SCK, FSY, and SRA0 of the OS81210 respectively, the bit clock (SCK) and frame sync signal (FSYNC) are used to synchronize the network frame rate between the data drive pins. When the port is configured in the general-purpose stream mode, all data pins (SRA0, SRXA1, SRXB0, SRXB1) use the stream port clock signal. At this time, the status of the four ports is determined by M0, M1, M2, and M3, the encoding chip uses the MAX9850, which is a high-performance stereo D/A audio encoding chip with a frequency of 8KHz to 48KHz, it has a built-in headphone amplifier that reduces the circuit size design, and Also supports I2C control, the maximum rate reaches 400KHz.

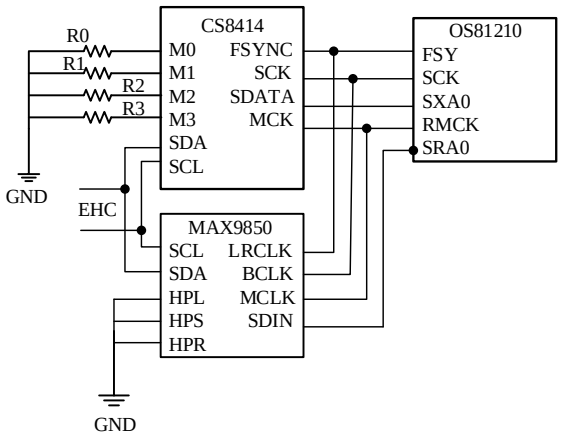

Figure 5. Audio system source node data conversion design

The OS81210 stream port supports four shared common sync signals and serial data pins, it also includes the left and right channels and the stereo encoding formats, the codec module converts signals into stream data format and sends signals to OS81210. the stream data port adopts the delay bit alignment format and is compatible with the I2C data format. In this paper, the encoding format of the stereo channel is used for data transmission, the byte start bit of each frame is delayed by one bit at the first FSY bit, the number of channels is used for data transmission, by calculation, each channel occupies a bandwidth of 48 kHz×16 bits×1 = 0.7 Mbit/s.

ISSN: 2414-1895 DOI: 10.6919/ICJE.202001_6(1).0031

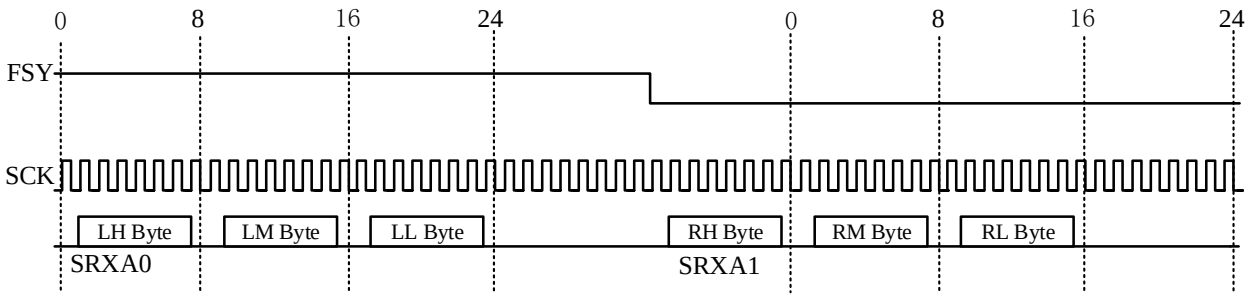

Figure 6. Stream port audio data format

4. Software Design of Source Node Based on INICnet

4.1 System Software Architecture Design

After the hardware platform design is completed, the software design and development for each functional module is carried out to realize the transmission of the audio data stream of the INICnet network. The software design of the system is as shown in the figure:

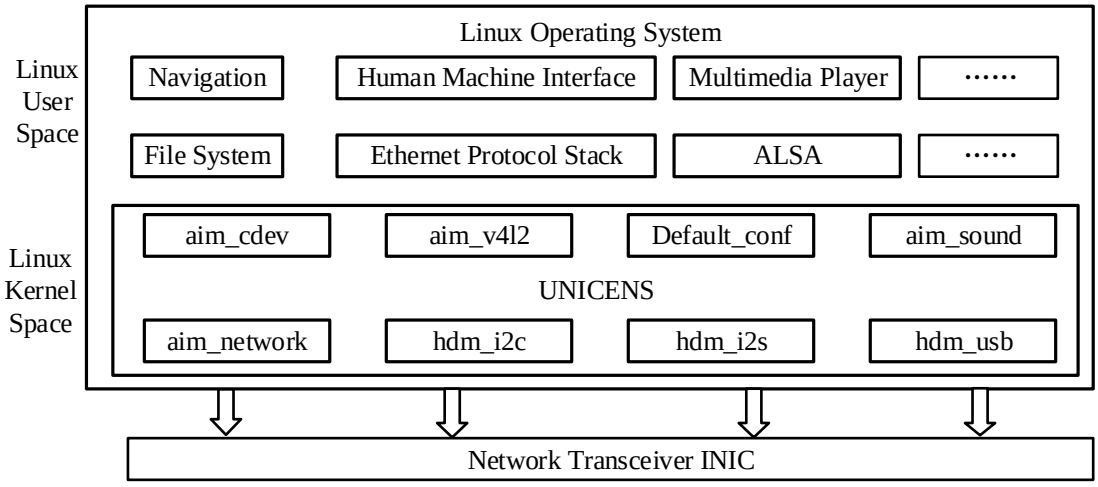

Figure 7. system source node overall software architecture

4.2 UNICENS Protocol Stack Design and Implementation

The INICnet network implements the device discovery, configuration, control, and connection process of device nodes through the UNICENS protocol stack, the configuration is implemented by an XML file, the configuration file needs to define the static address of each network node INIC chip, the data input and output interface and its working parameters. Start and end points of network channels, working parameters and message content of remote I2C communication of all network nodes. During device discovery, all nodes' chips temporarily set their device logical address to 0xFFE, after the master node starts the network, it first broadcasts a Hello packet, all the chips on the network report their own device signatures, the node that successfully matches will receive the welcome packet sent by the master node, if it is not received, it will remain bypassed, then entering the peripheral circuit initialization configuration, the configuration information is stored in the XML configuration file of the source node, the channel connection and allocation is realized by the UNICENS toolkit, design flow chart of the UNICENS protocol stack is as follows:

ISSN: 2414-1895 DOI: 10.6919/ICJE.202001_6(1).0031

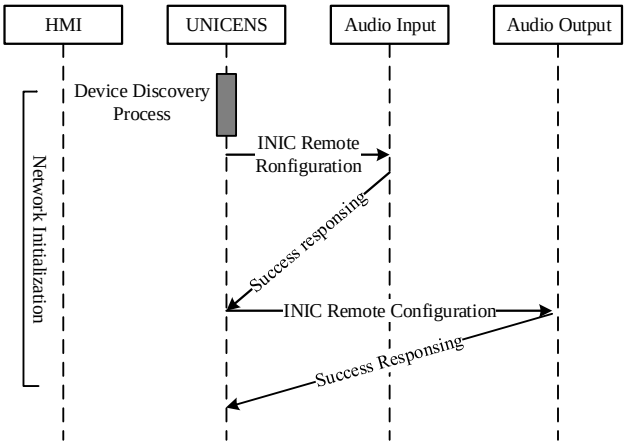

Figure 8. UNICENS design process

5. Verification

According to the characteristics of the INICnet network, to achieve the goal of verify the design feasibility of the audio source node, this paper builds a car audio system based on INICnet. Using the optolyzer Suite software to record the network message, it is observed that the audio system source node designed on the basis of INICnet completes the configuration of the UNICENS protocol stack, after receiving send instructions from PC, debug node monitors the packets transmitted in the network, and analyzes the INICnet network, we can view the audio data packet sent by the address 0x200 to the destination node 0x210, this results indicates that the communication status is good.

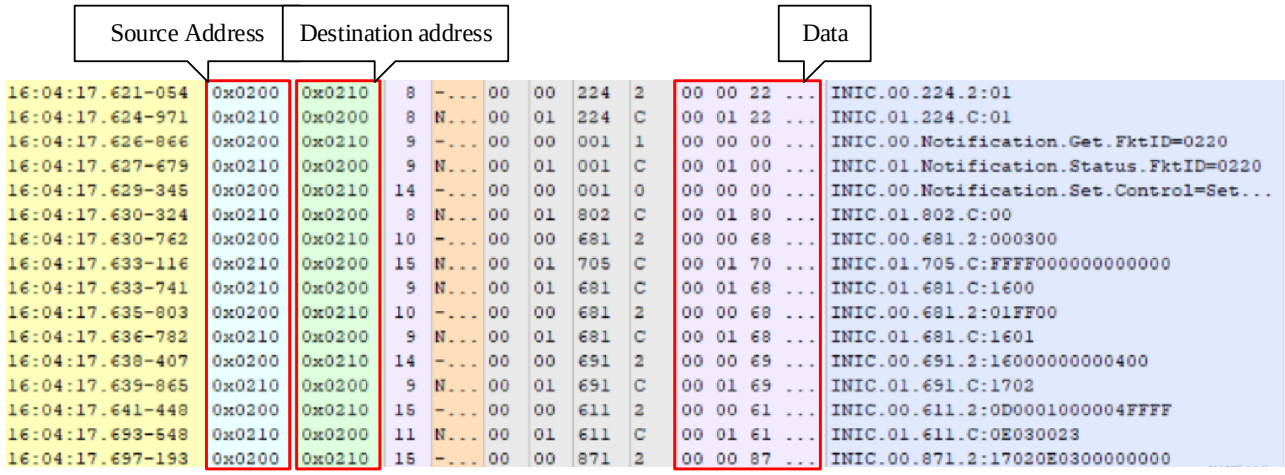

16:04:17.621-054	0x0200	0x0210	8	-...	00	00	224	2	00 00 22 ...	INIC.00.224.2:01
16:04:17.624-971	0x0210	0x0200	8	N...	00	01	224	C	00 01 22 ...	INIC.01.224.C:01
16:04:17.626-866	0x0200	0x0210	9	-...	00	00	001	1	00 00 00 ...	INIC.00.Notification.Get.FktID=0220
16:04:17.627-679	0x0210	0x0200	9	N...	00	01	001	C	00 01 00 ...	INIC.01.Notification.Status.FktID=0220
16:04:17.629-345	0x0200	0x0210	14	-...	00	00	001	0	00 00 00 ...	INIC.00.Notification.Set.Control=Set...
16:04:17.630-324	0x0210	0x0200	8	N...	00	01	802	C	00 01 80 ...	INIC.01.802.C:00
16:04:17.630-762	0x0200	0x0210	10	-...	00	00	681	2	00 00 68 ...	INIC.00.681.2:000300
16:04:17.633-116	0x0210	0x0200	15	N...	00	01	705	C	00 01 70 ...	INIC.01.705.C:FFFF000000000000
16:04:17.633-741	0x0210	0x0200	9	N...	00	01	681	C	00 01 68 ...	INIC.01.681.C:1600
16:04:17.635-803	0x0200	0x0210	10	-...	00	00	681	2	00 00 68 ...	INIC.00.681.2:01FF00
16:04:17.636-782	0x0210	0x0200	9	N...	00	01	681	C	00 01 68 ...	INIC.01.681.C:1601
16:04:17.638-407	0x0200	0x0210	14	-...	00	00	691	2	00 00 69 ...	INIC.00.691.2:16000000000400
16:04:17.639-865	0x0210	0x0200	9	N...	00	01	691	C	00 01 69 ...	INIC.01.691.C:1702
16:04:17.641-448	0x0200	0x0210	15	-...	00	00	611	2	00 00 61 ...	INIC.00.611.2:0D0001000004FFFF
16:04:17.693-548	0x0210	0x0200	11	N...	00	01	611	C	00 01 61 ...	INIC.01.611.C:0E030023
16:04:17.697-193	0x0200	0x0210	15	-...	00	00	871	2	00 00 87 ...	INIC.00.871.2:17020E0300000000

Figure 9. INICnet network data

6. Conclusion

Based on the research of the new entertainment system INICnet network, this paper designs the source node of the car audio system based on INICnet with OS81210 series chip, the software uses the new centralized protocol stack to realize the process. Finally, the packet data stream is intercepted by the Optolyzer studio tool analyzer, it is known from the conclusion that the audio source node of the INICnet network using UTP unshielded twisted pair can transmit synchronous audio data packets normally. The source node design scheme provides new ideas and references for the design of the vehicle digital audio system, the use of twisted pair cables reduces costs, this method provides a new option for seamless access to Ethernet for in-vehicle information and audio and video entertainment systems in the meanwhile.

References

[1] Qiu Sushi. Active Noise Reduction System Based on Most Centralized Protocol Stack[J]. China New

ISSN: 2414-1895 DOI: 10.6919/ICJE.202001_6(1).0031

Communications, 2019, 21(04): 31-33.
[2] Microchip's new intelligent network interface controller using MOST technology supports daisy-chain communication in automotive applications [J]. World Electronic Components, 2017(06): 34.
[3] SMSC COOPERATION. MOST BOOK_2.2013: 136-139.
[4] Zhang Wei. Networking of audio and video systems and the changes brought about by system control [J]. Intelligent Building and Urban Information, 2014(08): 93-95.
[5] Zhang Yongliang. Research and design of most audio networks based on INIC [D]. Changchun: Jilin University, 2011.
[6] Nanyang. Design and implementation of most network management and multi-channel connection management [D]. Changchun: Jilin University, 2012.
[7] Design and implementation of car owner facial recognition system based on most network [D]. Changchun: Jilin University, 2013.
[8] Wu Yunfeng. Audio Design and Implementation of Linux-based Car Infotainment System[J]. Information Communication, 2019(04):91-92+94.
[9] Fang Lin. Embedded car audio system design [J]. Heilongjiang Science and Technology Information, 2013 (22): 35.
[10] MOST COOPERATION. Intelligent Network Interface Controller for 50 Mbit/s Automotive Networks[M]. American: Microchip technology company, 2017: 31.
[11] Liu Limin. Research and Application of CAN/LIN/MOST Hybrid Bus Network Communication Test Technology[A]. China Society of Automotive Engineers. 2015 China Engineering Society Annual Conference Proceedings (Volume2) [C]. China Automotive Engineering Society, 2015: 5.