International Core Journal of Engineering Volume 5 Issue 12, 2019
ISSN: 2414-1895 DOI: 10.6919/ICJE.201911_5(12).0028

License plate recognition system based on STM32

Shenghong Wu [a], Jingliang Xie [b], Baolin Liu [c]

Chengdu University of Technology, Sichuan 610000, China

[a]Shengh1231@outlook.com, [b]jingliang-tse@outlook.com, [c]lbl1120@outlook.com

Abstract

This This paper designs a handheld license plate recognition system based on STM32. In this system, STM32F103RBT single chip is used as the main control chip, OV7670 camera is used for image acquisition, the license plate area is identified by the analysis of jumping points in a binary way, and then the license plate recognition results are obtained by segmentation and matching of characters. Finally, the handheld license plate recognition system is realized by Keil software programming.

Keywords

License plate recognition; Embedded; Character segmentation

1. Introduction

At present, with the number of private cars increasing year by year, all kinds of escapes after a violation of regulations occur from time to time. Only relying on the existing human traffic facilities and transportation systems, it is far from solving the current complex road traffic accidents[1].License plate recognition is an essential technology in the intelligent transportation system. License plate recognition plays a vital role in road monitoring and road control.

This paper designs a license plate recognition system based on STM32F103. The principle of license plate image acquisition and character segmentation is analyzed in detail, and a complete system is realized through Keil software. Finally, the feasibility of the proposed method is verified. [2].

2. System scheme

A entire license plate recognition system mainly includes image acquisition, binary image processing, license plate region recognition, license plate character segmentation, character matching. The system designed in this paper has three devices: image acquisition device, image processing device and image display device. This paper adopts the STM32F103 chip based on the ARM Cortex-M3 kernel as the design platform of this paper. It has high processing capacity and can carry out relatively complex calculations, basically meeting the needs of design, and the display device uses the TFT_ILI9341 2.8 display screen.

Based on the above framework, this paper studies the research and implementation of a license plate recognition system based on STM32 [3]. Before this, I read kinds of literature related to the algorithms of license plate recognition and character recognition, and I was very familiar with the STM32 chip and was able to apply it skillfully. Finally, the successful license plate recognition information is transmitted to the TFT display screen.

License plate area recognition and character segmentation are all based on the way of jump-dot-dash to determine the character boundary and license plate area. The software flow diagram is shown in figure 2.1.

ISSN: 2414-1895 DOI: 10.6919/ICJE.201911_5(12).0028

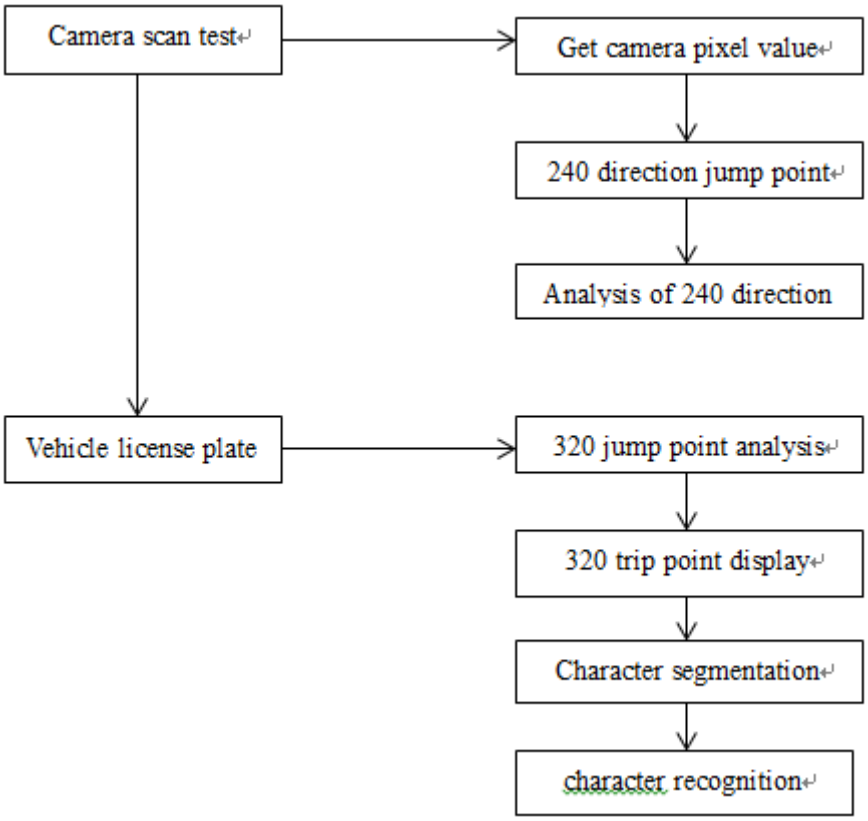

Fig2.1 software flow diagram

3. System hardware design

3.1 Minimum system design

The power supply of the system is DC5V, which is connected to the 5V pin of the STM32 core board. The STM32 core board changes the voltage from 5V to 3.3v through voltage stabilizing chip AMS1117 and outputs the energy through the badge of the score board. The 3.3v energy is the power supply voltage of the STM32 chip, camera module and TFT color screen. When welding the circuit, connect the camera module and TFT color screen to 3.3V pin instead of 5V pin [4].

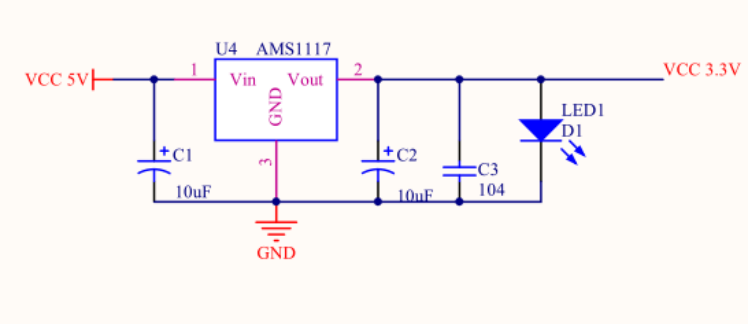

Fig3.1 schematic diagram of system power supply design

The processor of this paper is STM32F103RBT, a 32-bit high-performance embedded microcontroller chip with arm Cortex-M3 core,which has the advantages of low cost, abundant resources, low power consumption and power module circuit design. Fig3.2 and Fig3.3 are schematic diagrams of the STM32 mainboard and single chip microcomputer ,respectively .

ISSN: 2414-1895 DOI: 10.6919/ICJE.201911_5(12).0028

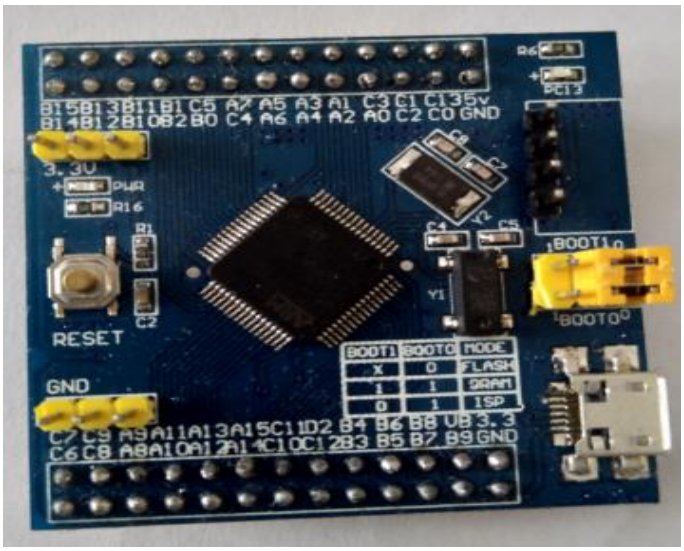

Fig 3.2 STM32 mainboard

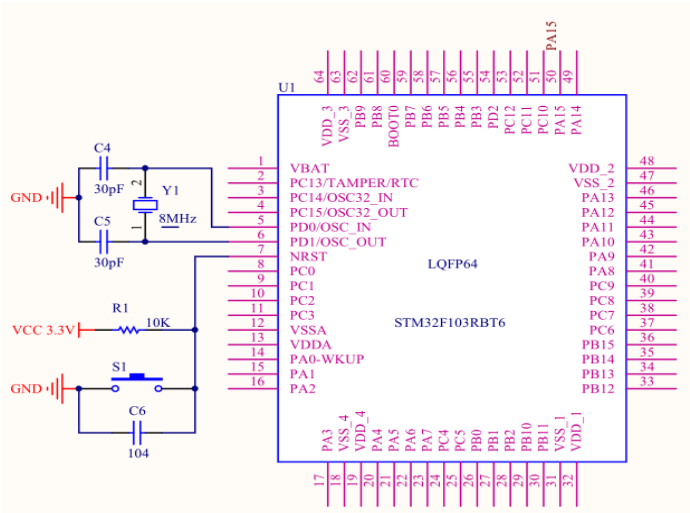

Fig3.3 Schematic diagram of single chip microcomputer

3.2 Design of image acquisition circuit

Compared with other cameras OV7670 has excellent advantages. OV7670 is a 1/6-inch VGA CMOS image acquisition sensor designed by OV (OmniVision). It not only has the benefits of small size and low power consumption; but also has all the functions of the image processor and VGA camera,which can make up for or even fully repair optical and electronic defects such as tail rest and dispersion. The main control chip STM32 in this paper is controlled by the SCCB bus, and can output 8bit image information of multiple resolutions in various modes, such as sub-sampling, window taking, and whole frame. It can output VGA images at speeds up to 30 frames per second. Figure 3.4 is the OV7670 camera. Figure 3.5 is the camera schematic.

3.3 System display design

The display part of this system adopts a 2.8-inch TFT module, which supports the length of 8/16 bit data, and also supports the RGB565 format of 240×320 pixels. The data length of this module is set to be 8 bits by default. The 16-bit data length can be used after the R11 on the back of the blad is shortened or welded with a 0-ohm resistor.

In the driver part, you only need to change the corresponding macro definition in a similar LCD driver. Compared with the black-and-white, the characteristic of the color images is that the amount of data is tremendous. If we choose the 8-bit interface, the transmission speed will be much slower than the 16-bit parallel interface.

ISSN: 2414-1895 DOI: 10.6919/ICJE.201911_5(12).0028

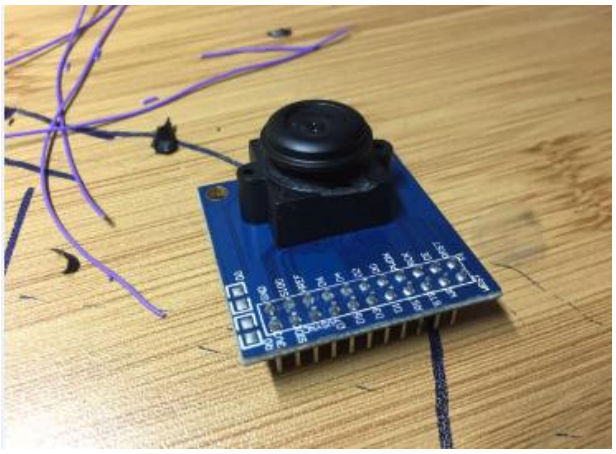

Fig3.4 Physical image of camera

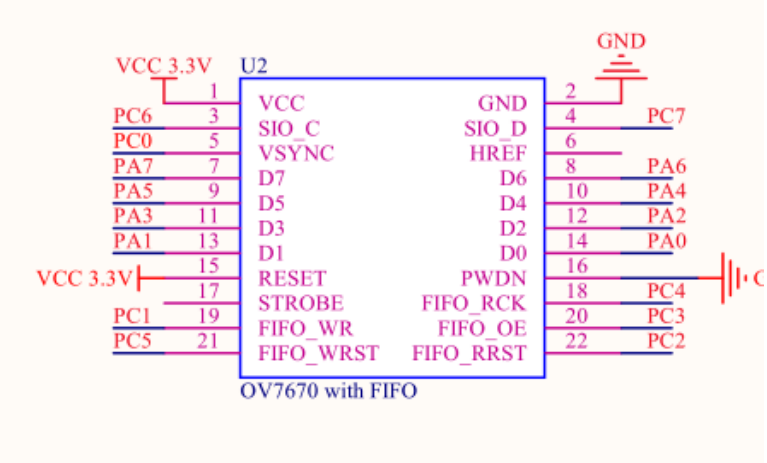

Fig 3.5 camera schematic

Figure 3.6 TFT display screen

4. Design and implementation of system software

4.1 Introduction to the STM32 development environment

In this paper, Keil for the arm is used as the integrated development environment for the software part of the system. This is a C language integrated development environment for various single-chip computers and microprocessors embedded with ARM launched by Keil software companies of the United States, which includes C / C + + compiler, project manager, arm assembler ,and connector..

Developers can choose compiler and other editors from Keil. The target file is then compiled by Keil and Keil compiler, respectively. The standard hex file is converted by the ABS file through oh51, because when debugging at the source code level, the debugger scope 51 or scope 51 needs to use the

ISSN: 2414-1895 DOI: 10.6919/ICJE.201911_5(12).0028

hex file. It also supports downloading and debugging the target board directly using the emulator or directly downloading to the program memory. Compared with other arm development environment, Keil not only has advantages of simple operation, friendly interface, high efficiency of object code, simple assembly code, but also reflects the maintainability of high-level language when compiling large amount of code.

4.2 STM32 ARM-Cortex software architecture

STM32 is an embedded microcontroller based on the ARM cortex core, and its microcontroller software interface standard is the m cortex processor and is not affected by the differences between manufacturers. Using CMSIS, it can provide a consistent and straightforward software interface between the processor and peripheral, reduce the reuse of software, significantly reduce the difficulty of programming on the ARM cortex and porting the operating system.

4.3 Software design of license plate recognition system

The image is collected by OV7670 camera. The collected image size is 320 * 240 pixels, and the pixel format is RGB565. The STM32 single-chip microcomputer reads the image, and the data is specially processed, and then displayed on the TFT display [5]. The ov7670 camera module is equipped with a FIFO chip, which is used to store images temporarily. It can obtain image data at high speed and reduce the burden of CPU. Therefore, this paper adopts the way of FIFO to read the data of ov7670. The main functions of the image acquisition process are as follows:

```
OV7670_Gpio_Init();//OV7670
Data_Image_Capture();//
```

Histogram analysis: In the process of collecting data, the ov6670 camera binarizes each pixel in the image, that is, sets the thresholds of R、G and B. Through binary processing, the pixel value is divided into two kinds: all black 0x0000 and all-white 0xffff. At the same time, the jumping point of each line is analyzed by the program. The purpose of analyzing the jump point is to identify the license plate area.Many procedures are as follows:

```
if((R>R_a) && (G>=G_a) && (B>=B_a))//
    {
    color=0xffff;
     }
else
{
    color=0x0000;
     }
    if(color!=color_1)//
{
      //
      TableChangePoint_240[a]++;
     }
```

At present, there are two technologies to solve the problem of license plate location. The first is to do a series of processing on the binary black-and-white image. The second method uses color space distance and similarity to segment the bottom color of the license plate, and It locates the license plate image based on the edge color pair .

In this paper, through the binary analysis of the jump points in each row, because of the characters in the license plate area, the jump points are more visible, about more than 15. Through the analysis and judgment of the jump points, the location of the license plate area can be identified. As shown in the figure below, the red mark points on the left are the number of jump points in each line. In this system

ISSN: 2414-1895 DOI: 10.6919/ICJE.201911_5(12).0028

program, the number of jump points is more than 15. When there are more than 15 jump points in the continuous line, the start position is set as the upper boundary of the license plate area, and the end position is set as the lower boundary of the license plate area. Then through RGB-HSV color conversion, the left border, and right boundary of the license plate area are identified. In this way, the exact edge of the vehicle area can be obtained. Some procedures are as follows:

```
void ChangePoint_Show_240();//240
        for(a=0;a<240;a++)//
    {
      //
        LCD_DrawPoint(TableChangePoint_240[a],a,0xf800);
     //
        if(TableChangePoint_240[a]>=15)
    {
          //
              for(b=35;b<40;b++)
          {
                    LCD_DrawPoint(b,a,0x6666);//Green
              }
        }
    }
}
```

For the display function of 240 direction jump point, first establish a reference line, and draw three green lines in the vertical direction, respectively, at the horizontal coordinates of 10, 20 and 30, to draw points later. If there are ten jump points in this line, draw a red dot on this line. The procedure for bringing the green line is as follows:

```
void ChangePoint_Analysis_240()//240
{
Min_ChangePoint_240=240;Max_ChangePoint_240=0;

for(a=0;a<240;a++)//240：Min_ChangePoint_240,
Max_ChangePoint_240
    {
        while(TableChangePoint_240[a]<=15)
              {
                    a++;
        }
        Min_ChangePoint_240=a;
        while(TableChangePoint_240[a]>15)
        {
              a++;
        }
    Max_ChangePoint_240=a;
    if(Max_ChangePoint_240-Min_ChangePoint_240>=15)
```

ISSN: 2414-1895 DOI: 10.6919/ICJE.201911_5(12).0028

```
 { a=240;}
Min_ChangePoint_240=Min_ChangePoint_240-3;
Max_ChangePoint_240=Max_ChangePoint_240+2;
for(a=30;a<280;a++)
{
      LCD_DrawPoint(a,Max_ChangePoint_240,0x001f);
      }
for(a=30;a<280;a++)
{
  // Normalization
for(a=30;a<280;a++)
{
      LCD_DrawPoint(a,Min_ChangePoint_240+50,0xf800);
}
flag_MaxMinCompare=1;
if(Min_ChangePoint_240>Max_ChangePoint_240)
 {
      flag_MaxMinCompare=0;
}
if(Min_ChangePoint_240==240||Max_ChangePoint_240==0)
{
      flag_MaxMinCompare=0;
}
if(Max_ChangePoint_240-Min_ChangePoint_240<15)
{
      flag_MaxMinCompare=0;
  }
}
```

During the processing, the left boundary K and the right boundary K of each character are obtained. If the number of characters is 8, the segmentation is more accurate. After segmentation, normalization is carried out. Match the characters one by one. The character template is first extracted and stored in the program through the module taking software, and its size is a single pixel of 24 * 50. After matching, the corresponding character of the maximum similarity value is considered as the output result and displayed. Some main arrays and functions in license plate recognition are as follows:

```
Stm32_Clock_Init(16);
    Data_LCD_ColorChange();
u8 MoShiShiBie_All(u8 begin,u8 end)
{
        u16 Compare_num,num_save;
        u8 a,b,e,a_save,st1,st2,s1,s2;
        int num1;
        for(a=begin;a<end;a++)   //36
        {
```

ISSN: 2414-1895 DOI: 10.6919/ICJE.201911_5(12).0028

```
            num1=0;
            for(b=0;b<150;b++)
            {
                st1=table_picture[b];
                st2=Table[150*a+b];
                for(e=0;e<8;e++)
                {
                    s1=st1&(1<<e);
                    s2=st2&(1<<e);
                    if(s1==s2) num1++;
                }
            }
        }
    }
```

5. System test

The hardware part of the system adopts STM32RTB103, and its kernel has a maximum working frequency of 72MHZ, which can reach 1.25DMips/MHZ when the memory is accessed in the 0 waiting period. The camera is 300,000 pixels. When the system is turned on, the camera aims at the license plate used in the test. Through the display screen, the image collected by the camera can be visible real-time. The appropriate Angle can be selected to make the license plate information entirely within the blue border area. The result column displays the license plate number. The correct license plate identified will be temporarily saved, and the number of protected license plates is 5. The test process and results are shown in figure 5.1

Fig 5.1 Test Results

6. Conclusion

In this paper, the STM32F407VGT6 microcontroller with arm cortex core is used to study license plate recognition. Using the OV7670 camera and model GTM900-B GPRS module, a set of the basically complete design of license plate recognition handheld mobile terminal based on STM32 is completed. Compared with the system based on FPGA or DSP, the circuit of this system is simple, costs less ,and consumes less power. The hardware circuit of the method includes the minimum order, the OV7670 camera, TFT display, GTM900-B ,and other auxiliary circuits. After the welding of thcompleted and after testing the system regularly, the expected function is completed.

Acknowledgements

Natural Science Foundation.

ISSN: 2414-1895 DOI: 10.6919/ICJE.201911_5(12).0028

References

[1]Liu Linzhen, Zhang Zhengzhu. “Application of license plate recognition module based on STM32 in fireworks traceability system”.Computer and digital engineering,2015,(04):710-713+741.

[2]Cheng-dong Wu. "License plate location algorithm in complex scene", 2009 Chinese Control and Decision Conference, 06/2009

[3]Duan Liren. “Application of intelligent transportation system in China's road traffic management”. 97 International Symposium on the development trend of intelligent transportation system in Beijing.

[4]Zhang Yujin. “Image Engineering Volume I: image processing and analysis”. Beijing: Tsinghua University Press, 1999.2.

[5] Liu Qi, Wang Yinling, Wu Linheng. “Research and design of image acquisition and display system based on STM32”. Digital technology and application, 2012, (15): 35

[6] Chuin Mu Wang, Jian De Hong, Geng Cheng Lin, Jing Yuan Su, Zhe Fu Lin. "License Plate Location System Using Smart-Phone with G Sensor", 2014 Tenth International Conference on Intelligent Information Hiding and Multimedia Signal Processing, 2014