International Core Journal of Engineering Volume 5 Issue 12, 2019
ISSN: 2414-1895 DOI: 10.6919/ICJE.201911_5(12).0016

Small Metal Intelligent Detector

Mingyu Zhang

Suzhou Vocational Institute of Industrial Technology, Department of Electronic and Communication Engineering, Suzhou 210154, China;

zmy_hlg@163.com

Abstract

In this paper, a metal intelligent detector system is designed. The hardware and software circuits of the whole metal intelligent detector system are divided into LCD1602 LCD display circuit, ADC0832 analog-to-digital conversion circuit, alarm circuit and speed measurement circuit. AT8 is used in the selection of the core control scheme. 9C51 MCU is used as the controller. The program code used to control AT89C52 MCU is written in C language. After compiling and generating HEX target file by KEIL software, it is burned into the main control chip. Through its GPIO pin, it drives LCD1602 display, ADC0832 analog-to-digital converter, active buzzer and Hall sensor, and realizes the drive to the LCD1602 display, ADC0832 analog-to-digital converter, active buzzer and Metal materials and articles are used for detection, liquid crystal display and alarm prompting. In order to verify the design results of each link, in order to achieve the optimization and improvement of metal intelligent detector system from the verification results, after many experiments, the system shows a stable working state.

Keywords

Metal detector; sensor detection circuit; AT89C52 microcontroller.

1. Introduction

At present, most of the metal intelligent detector systems on the market take high-performance microprocessors such as single chip microcomputer as the main control core and collect the external input signals through the high-precision sensor module, and then carry out high-speed operation processing through the high-performance operation module to achieve the output of the control results. Most of the relevant systems are based on single chip microcomputer or PLC and LCD1602 lattice screen. ADC0832 converter, active buzzer and Hall sensor. This project will use AT89C52 as the main controller[1-3]. After sorting out the whole development process of the metal intelligent detector system from the initial simple type to the current intelligent type, it can be seen that the internal of the metal intelligent detector system needs to combine a variety of science and technology and disciplines. First of all, for its internal main control core, the current high-end metal intelligent detector system must be in the circuit to achieve more intelligent functions. Embedded 32-bit microprocessor chips with arm and other cores as CPU, only such cores can complete high-speed data processing. In this paper, the data of most metal intelligent detector system products on the market in recent years are reviewed, and the advantages and disadvantages of each product are summarized. It can be found that the advantages of this kind of system are mainly manifested in the internal use of microprocessor chips such as single chip microcomputer as the main control, and the product developers can convert various functions through program language codes such as C language, etc., in order to carry out the advantages and disadvantages. In the process of design, we only need to change the program code through the program compiler, and then burn it to complete the system update and optimization. Therefore, compared with the traditional analog circuit, the product update

ISSN: 2414-1895 DOI: 10.6919/ICJE.201911_5(12).0016

has more advantages. The typical disadvantages of these systems are that there are various types of bugs in the program code. Some of these bugs are obvious and some are very hidden. Sometimes it is difficult for the program developers to detect the hidden dangers brought by these bugs. Therefore, the research and development of this kind of digital metal intelligent detector system has higher requirements for the program design level of the designers.

In recent years, metal intelligent detector system has been continuously implanted with various new sensors. It can be said that the rapid development of sensor technology is greatly promoting the development of metal intelligent detector system. According to a report, a research team of metal intelligent detector system at Columbia University in the United States released their latest research. Research results: Based on a high-performance metal intelligent detector product, they took off the sensor probe used in the product to collect external signals and replaced it with a new sensor probe with higher technology developed by themselves. Because this type of probe and internal microprocessor use analog voltage signals for signal interaction, so It can be used directly after replacement. At present, the research and development team of metal intelligent detector system in China mainly focuses on how to significantly reduce the power consumption of this control system. The more effective solution is to use the main control chip with sleep mode. After the rapid development in recent years, the metal intelligent detector system has achieved a significant performance improvement, basically has been fully developed and mature. No matter the research and development technology or production line of the system, it has been widely used in related enterprises at home and abroad, and it is most widely distributed in the Southeast coast of China[4-5].

This paper will study a metal intelligent detector system which can realize the functions of lattice display, high-resolution data acquisition, sending alarm and magnetic field detection. This system is designed and implemented based on AT89C52 single-chip development platform. This topic will summarize the performance of this product in the past period of time from the development background and current situation of this system as the starting point. After the general advantages and disadvantages, the design objectives and functions of this project are proposed. The whole project is divided into two parts: hardware system and software system. The following design objectives are achieved. It can achieve very clear liquid crystal display effect, and can realize the fast update speed of metal detection results; it can carry out the fast conversion of analog voltage and digital signal, and send the analog voltage output by Hall sensor to AT89C52 MCU for use after low bit error rate conversion; it can design an alarm circuit, and can pass AT89C52. The driving and controlling alarm circuit of the pin of the single chip microcomputer will alarm when the metal substance is detected; it can convert the alternating signal of magnetic field into alternating signal of voltage through the design of the hall sensor circuit to realize the measurement of metal.

2. Design Scheme

The expected functional indexes of the metal intelligent detector system are established. In order to see how the functions are realized more intuitively, the whole system implementation scheme is designed here. All modules take the minimum system of single chip microcomputer as the core part in the signal flow relationship, and the surrounding LCD screen displays electricity through the control of the minimum system circuit. Circuit, ADC0832 analog-to-digital conversion circuit, buzzer circuit and magnetic field measurement circuit control, through this way to achieve the expected functional indicators. The single chip microcomputer first drives the coil to send the vertical magnetic field to the object to be tested. When the magnetic field enters the object to be tested, if the object to be tested is not made of metal, there will be no eddy current inside the object to be tested, so the hall sensor can not detect the derivative magnetic field generated by the eddy current, so the eddy current magnetic field intensity obtained by the single chip microcomputer is 0. If the object to be tested is made of metal, the magnetic field entering the metal will produce eddy current effect in the metal, and the eddy current effect will produce a derivative magnetic field. The direction of the derivative

ISSN: 2414-1895 DOI: 10.6919/ICJE.201911_5(12).0016

magnetic field will point directly to the hall sensor, and the strength of the derivative magnetic field can be measured by the hall sensor to know whether there is metal.

The memory capacity of AT89C52 chip is suitable for most small systems. The designer not only integrates a small capacity flash module, but also integrates a ram part outside the CPU, which is next to the CPU layout, so that the CPU can quickly read the data value in the ram during high-speed operation. The bus design inside the AT89C52 chip is very flexible. , which can meet the requirements of high-speed data throughput. The internal resources of AT89C52 single chip are very rich. In addition to some memory modules that meet the basic needs, it also has high-performance timer modules, interrupt mechanisms and various communication interfaces. In some common single chip microcomputer control systems, these resources are very practical, without the need for users to carry out circuit configuration of these modules again, which can save most of the circuit development costs. And reduce the size of the hardware system.

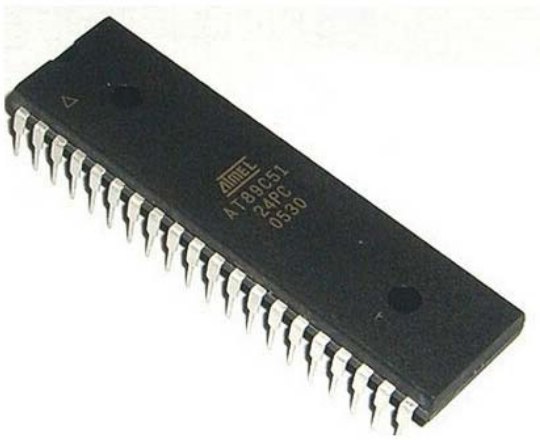

Fig. 1 figure of single chip

The purpose of designing the minimum system circuit is to make AT89C52 chip correctly execute the program code in its internal flash module, and to make the state of program execution can be controlled by the user, so as to realize flexible restart or normal operation. The reset circuit in the minimum system circuit adopts the capacitance isolation method. According to the circuit connection method and component parameter value as shown in Figure 3, when the metal intelligent detector system is powered on for a moment, the instantaneous current can flow through the capacitance, at this time, the voltage at both ends of the resistance is high level, so that the AT89C52 single chip computer resets at the moment of power on, and then returns to the output low level. The system Achieve normal operation.

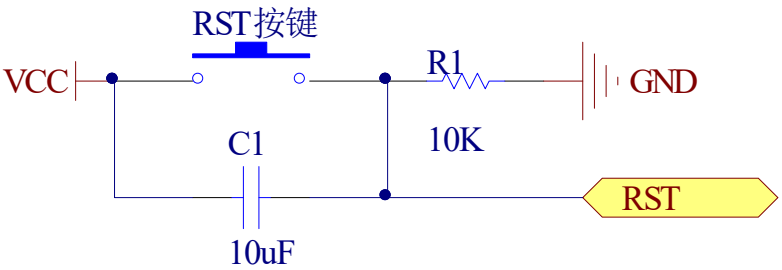

Fig. 2 Reset circuit

In order to control the substance to be measured to send out alternating electromagnetic signal, this subject uses the coil probe as shown in Figure 5, which will be able to send out detection signal under the control of microprocessor.

ISSN: 2414-1895 DOI: 10.6919/ICJE.201911_5(12).0016

Fig. 3 Physical drawing of coil probe

According to Faraday electromagnetic induction effect, if the object to be tested is metal, the alternating magnetic field signal detected by the coil will generate eddy current effect after entering the metal, and the eddy current effect will generate a vertical upward magnetic field signal, as indicated by the red arrow in Figure 7, the eddy current magnetic field will be detected by the hall sensor. If it is detected, it means that the object to be tested is metal, otherwise it is not 。

Before leaving the factory, Hall element, comparator, conversion circuit, power processing, LED lamp and other modules have been designed inside the hall sensor. In the design task of this project, the common GPIO pin of AT89C52 microcontroller can directly drive and control the various functional modules inside the hall sensor. Through the mutual connection and interaction of these functional modules, the final result can be achieved. Realize the function of collecting eddy current magnetic field signal. When the hall sensor detects the magnetic field signal generated by the eddy current magnetic field, the output analog voltage is characterized. Because the single-chip microcomputer can not directly collect the analog voltage signal, the ADC0832 conversion circuit as shown in Figure 10 is configured, and the signal output pin of the hall sensor is directly connected to the CH0 sampling channel of ADC0832. On the interface between ADC0832 and AT89C52 single-chip microcomputer, p3.5 ~ P3 is allocated. . 7 three pins are used to connect CS, CLK and di / do of ADC0832 analog-to-digital converter. The main function of ADC0832 ADC driving circuit in this system is voltage data conversion. Its peripheral driving circuit is relatively fixed. Generally, in most single-chip systems or embedded systems, the same way of bottom hardware connection is used. No matter the power supply part or pin drive, it is connected by positive 5V DC voltage and its 3 pins, such as 5 ~ 7. And then the function of voltage data conversion can be realized by controlling the same software driver code.

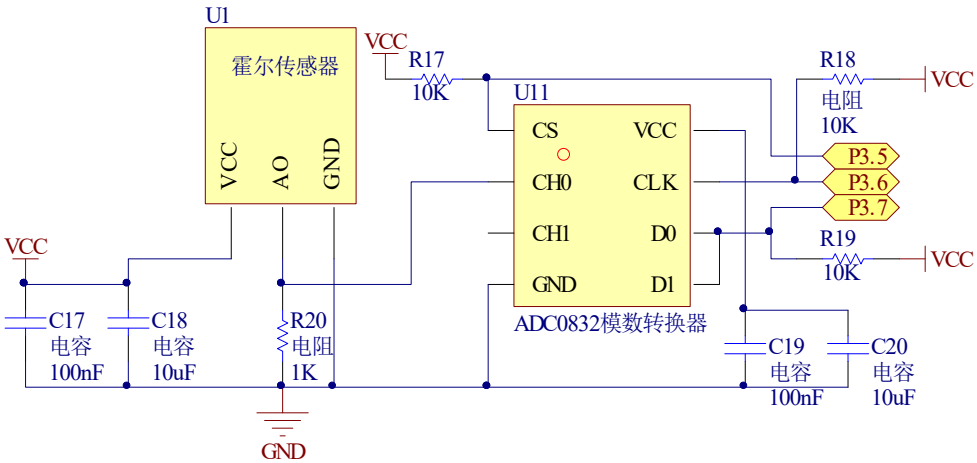

Fig. 4 Circuit design of magnetic field measurement

Through the basic introduction of LCD1602 dot matrix screen, we can know that this device leads out 16 pins in total. Among these 16 pins, pins 4-14 are the communication pins of this device. AT89C52 single chip computer can drive these 16 pins through common GPIO pins, and realize the data mutual collection between AT89C52 single chip computer and LCD1602 liquid crystal screen through specific bus interface. Mutual transmission, as shown in the circuit schematic diagram in Figure 12, LCD1602 liquid crystal screen has the function of contrast adjustment, the metal intelligent

ISSN: 2414-1895 DOI: 10.6919/ICJE.201911_5(12).0016

detector system will use about 1.0V DC voltage to apply to the V0 pin of the module to adjust the best contrast, then connect the P0 port of AT89C52 single chip microcomputer to db0 ~ DB7, p2.5 ~ p2.7 to en, RW and RS, so as to build the AT89C52 single chip microcomputer to LCD1602 liquid. Through the design of the circuit, the AT89C52 MCU will drive the LCD1602 lattice screen to display the important parameters.

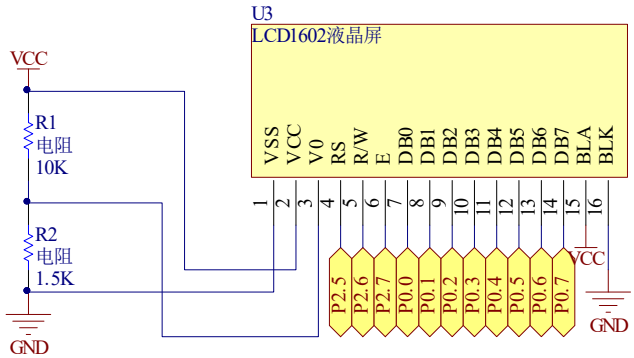

Fig. 5 LCD1602 LCD circuit design

The software design of the metal intelligent detector system will be composed of the main program, the liquid crystal display subroutine, the analog voltage acquisition subroutine, the buzzer subroutine and the magnetic field detection subroutine. First, the main program of the metal intelligent detector system is designed. The main program is the most important part of the software system, and its working process will not Disconnect and call each subroutine to realize the function of each hardware module circuit.

When the system enters the formal working stage, the single-chip microcomputer will firstly send out a current with a certain intensity to drive the coil, which will generate a magnetic field inside the coil, and the magnetic field will play a role when it enters the object to be tested. If the object to be measured is not a metal, the magnetic field will not generate eddy current inside, so the hall sensor will not be able to measure the derived magnetic field, so the system determines the object to be measured as a non-metal. When the object to be tested is a metal, the magnetic field entering the metal will produce eddy current effect inside it, and the eddy current effect will produce a derivative magnetic field. After the magnetic field passes through the hall sensor, the hall sensor will output a DC analog voltage to represent the magnitude of the derivative magnetic field, and then the DC analog voltage will be converted into a digital signal through ADC0832 analog-to-digital converter and transmitted to 51 single. Chip machine, 51 single-chip microcomputer judge the magnitude of magnetic field strength. If the magnetic field is very strong, it shows that the eddy current effect is very obvious, so it contains metal. Then the MCU will drive the buzzer module to send out a prompt sound to indicate the measured results, and drive the LCD1602 LCD to display the measured results.

After the above design of LCD1602 display hardware driver circuit, the configuration of pins in the software code and the general process of software workflow have been basically determined. The next work will be to generate data signal flow according to the specific timing of LCD1602 LCD screen through GPIO pins of AT89C52 single chip microcomputer, and then send it to pin 4-14 of LCD1602 LCD screen, and then Its internal core circuit is controlled to realize the LCD display function with high definition effect. The main function of LCD driver subroutine is to receive the data. Different lattice information is retrieved through the data content to complete the display. After AT89C52 MCU starts to drive LCD1602 LCD screen, RS pin of LCD screen will receive a continuous high level immediately, which makes LCD screen enter the data writing mode. Then AT89C52 MCU outputs the data to LCD screen immediately through P0. DB port, so that the LCD can receive the correct data content.

The subprogram design of ADC0832 analog-to-digital converter mainly involves two program processes: starting conversion and reading sampling conversion data. This requires C language to build program code and send and receive instructions according to the time sequence given in the

ISSN: 2414-1895 DOI: 10.6919/ICJE.201911_5(12).0016

data provided by the manufacturer. Next, the implementation method of the whole process is illustrated by an actual driving process (actual analog voltage acquisition), as shown in Figure 17. As shown in the flow chart of AT89C52, when driving ADC0832 analog-to-digital converter to collect and convert the analog voltage signal input from the outside, ADC0832 can quickly collect and convert the voltage signal after configuration such as startup and channel selection, and send the collection result to the AT89C52 single-chip computer for processing. After the AT89C52 single-chip computer obtains the 8-bit collection result, it carries out simple processing according to the formula. After conversion, the value of voltage to be measured can be obtained.

Subprogram design of active buzzer

The main function of the driving process of the active buzzer is to generate the buzzer alarm signal. Because the main control chip used in this project is AT89C52 single chip microcomputer, it is necessary to use C language to build program code to control the GPIO pin of the single chip microcomputer to realize the driving of the buzzer. The active buzzer subprogram is easy to show that the buzzer is hot, abnormal voice color, low voice and Silent and other faults, in order to avoid the occurrence of these faults as much as possible, the delay link in the subprogram should keep a large delay time as much as possible, so that there is enough reaction time between AT89C52 single chip and buzzer. The following describes the subprogram working process of the active buzzer through the flow chart, and the control process of the buzzer is through at8 According to the above circuit design results, when p2.0 output high power, it can drive the buzzer to generate alarm sound, and when p2.0 output low power, it will stop the buzzer.

3. Conclusion

In view of the limited knowledge we have, we did not fully consider the details of this metal intelligent detector system. There are many things that can be optimized in terms of the overall appearance of the hardware circuit and the control process of the software code. However, the design cycle is limited, so we can not continue to improve the performance of the system. The main problems are as follows: In the following aspects, the first is the main control device. The DSP digital microprocessor with more powerful performance can be used for control to achieve better control functions. The second is the key selection. In order to greatly reduce the cost factor, the subject selects the mechanical key with low price as the input, but the hand feeling is not good. It can be considered to use the touch key. Make improvements.

Acknowledgments

This work was in part supported by the Research Fund of Suzhou Institute of Industrial Technology , the Young Teachers of Vocational Colleges Enterprise Practice Training Project of Jiangsu Province, and the Scientific Research Foundation of Suzhou Institute of Industrial Technology, to which the authors are deeply indebted.

References

[1] Nováček P, Svatoš J. Intelligent Metal Detector[J]. Key Engineering Materials, 2013, 543:133-136.

[2] Fu X H, Xu L B. Design of New Metal Detector[J]. Advanced Materials Research, 2011, 328-330:1431-1435.

[3] Singh M. Implementation of Intersection Management Algorithm considering Autonomous and Connected Vehicles[J]. 2013.

[4] Blokker P. Method of detecting contamination in industrial process boiler systems[J]. 2012.

[5] Kwok S P, Haddad G I, Lobov G. Metal-Oxide-Metal (M-O-M) Detector[J]. Journal of Applied Physics, 1971, 42(2):554-563.