Design and processing of fire extinguisher cover injection mold

Hui Li [a], Jie Dong [b], Huimin Sun [c], Jinhua Liu [d], Liangchao Hou [e]

College of Mechanical and Electronic Engineering, Shandong University of Science and Technologr, Qingdao, 266590, China

[a] 873519125@qq.com, [b] 1374623537@qq.com, [c] 1281808102 @qq.com, [d] 1220204543@qq.com, [e] 931936226@qq.com

Abstract

In the case of daily fire extinguisher shell cover, on the basis of the manufacturability analysis of plastic parts, use SolidWorks software to complete injection mould design of the fire extinguisher shell cover, and using CAXA engineer to numerical control simulation processing of cavity, and generate nc code.

Keywords

Fire extinguisher shell cover; Injection mould;The nc machining.

1. Introduction

With the rapid development of molds, people are increasingly demanding daily-use plastic products. This design uses CAD/CAM technology to design a set of injection molds using the most familiar and commonly used fire extinguisher cover[1]. The application of CAD/CAM technology significantly shortens the design cycle, improves design efficiency, and saves design costs.

2. Process analysis of plastic parts

The design object is the fire extinguisher cover, the plastic material is PP1340 (polypropylene), and the plastic parts are as shown in Fig. 1. Firstly, from the perspective of the plastic structure, the overall view is an inner-column-shaped rotating body structure, and the outer wall is four symmetrically distributed through holes. Secondly, from the perspective of the dimensional accuracy of the plastic parts, the important dimensions of the parts are Ø〖90〗_(-0.20)^(+0.45)mm, Ø34mm, Ø50mm, 100mm, and the dimensional accuracy is MT3, the secondary size. It is 24mm, 10mm, 82mm, and the dimensional accuracy is MT4. Therefore, the dimensional accuracy of the plastic parts is medium, and the processing of related parts in this design can be guaranteed. Finally, the surface of the plastic part is required to avoid defects, flashing and shrinkage. The surface roughness of the polypropylene during injection molding ranges from 0.025 to 1.6 mm. This design can meet the surface quality requirements.

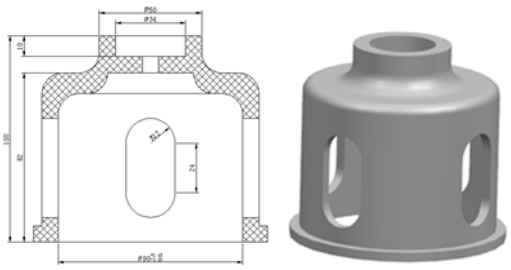

Fig. 1 Plastic parts

Polypropylene is a semi-crystalline material that is colorless, odorless, non-toxic, has good transparency and stiffness, strength and hardness, has good high frequency insulation and is not

affected by its humidity. The specific gravity is 0.9 to 0.91 g/cm3; the molding shrinkage is 1.5 to 2.5%; the molding temperature is 160 to 220 ° C; the optimum mold temperature is about 80 ° C, and the minimum is not lower than 50 ° C [3].

3. Injection mold design

3.1 Selection of injection molding equipment

The so-called injection molding equipment is also the injection molding machine. This mold design is based on the injection molding quantity to select the injection molding machine model. The idea is to first estimate the total amount of injection required for injection molding, and then according to the actual maximum injection volume of the injection molding machine, 80% of the maximum injection volume is allowed to obtain the maximum allowable injection volume of the injection molding machine, which is allowed according to the injection molding machine. The maximum injection range is available to select the injection molding machine. It is estimated that the injection quantity required for plastic parts is 312.27cm3, and the injection quantity required for the sprue system is 1.3cm3, so the total injection quantity required is 314cm3. The design injection molding equipment was selected as the XS-ZY-500 injection molding machine.

3.2 Parting surface design

Due to the high height of the plastic part, the independent cavity is adopted in the vertical direction, and the principle of the parting surface selection is followed. The maximum forming plane at the bottom of the plastic part is the parting surface of the design. As shown in Fig. 2 below. Selecting the parting surface at the bottom of the largest forming plane of the plastic part can effectively avoid the phenomenon of flashing on the surface of the plastic part, and the flashing edge appearing at the parting surface can be easily removed without affecting the surface quality of the plastic part.

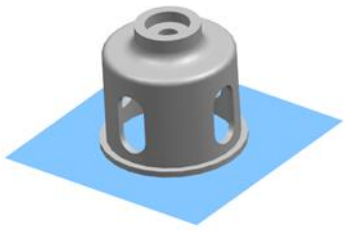

Fig. 2 Partition surface diagram

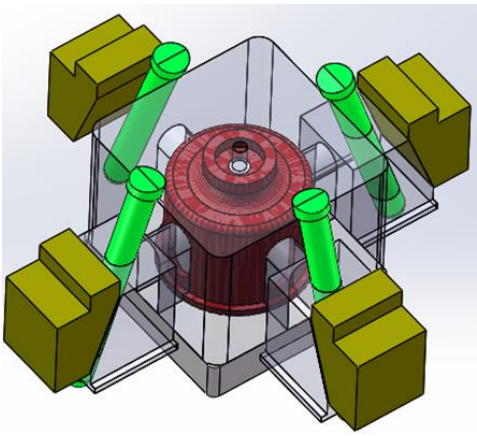

Fig. 3 Side core pulling mechanism

3.3 Selection of core pulling mechanism

The plastic parts are surrounded by four symmetrical through holes, which must have a side core pulling mechanism design. Since the wall thickness of the plastic part is 8mm, the required core pulling force and the core pulling distance are small, so the design uses the oblique guiding column lateral parting and core pulling mechanism, as shown in Fig. 3 below.

3.4 Other structural design of injection mold

This mold design belongs to small and medium-sized molds. It adopts the direct-casting type C standard formwork in GB/T12555-2006, which is marked as C3535-130×80×150. Because it is a one-cavity mold design, in the design of the gating system, regardless of the design of the runner, the main channel is designed directly above the geometric center of the parting surface, so that the design reduces the flow path. To avoid the loss of plastic melt temperature and pressure. In order to ensure that the plastic melt can fill the entire cavity quickly and evenly, the sprue uses a spoke gate. Considering that there are four relatively large through holes around the plastic part, this is very helpful for the exhaust of the mold filling, so the gas generated during the injection molding process can be discharged from the gap between the surrounding through hole and the core. The elimination of the separate design of the exhaust system steps. The mold is horizontal in injection molding and mold opening, and the cavity adopts a separate cavity. When the mold is opened, it moves along with the template, so the ejection device only completes the top force required to eject the plastic part from the core. It is only necessary to overcome the friction between the plastic part and the core, and comprehensively consider the ejector device in this design adopts the most common common ejector ejection device.

3.5 Mold assembly

This mold design uses SolidWorks to draw and assemble the entire injection mold in three dimensions as shown in Fig. 4and Fig. 5. The SolidWorks software has the function of interference analysis on the assembly, which helps us to judge whether there is interference between the parts during the assembly process, and to ensure that no two parts overlap in space. During the inspection process, the gap between the components can be dynamically checked by moving or rotating the components to avoid interference between the real objects during installation and installation, so as to find problems and modify the model in time to guide the satisfactory results. This design, in addition to the design of the 3D map, also needs to use Auto CAD to draw important parts and assembly drawings, and detailed labeling, to facilitate the workshop workers to accurately process the relevant parts.

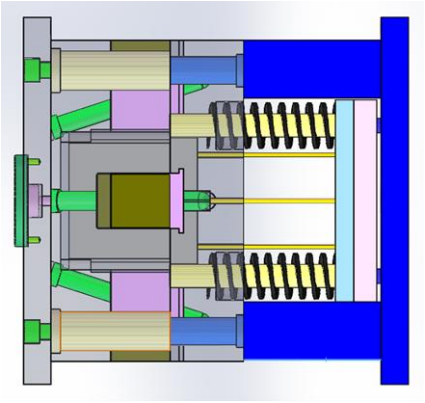

Fig. 4 Formwork structure

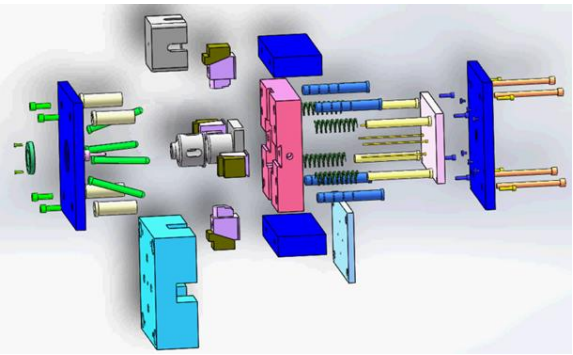

Fig. 5 Mold explosion diagram

4. Numerical control simulaction of cavity.

This design uses CAXA engineers to complete the CNC simulation processing of the cavity and then generate the NC code.

4.1 Cavity numerical simulation process

Briefly analyze the structure and quality requirements of the cavity. The shape of the cavity is a quadrangular prism with a bottom area of 150mm×150mm and a height of 110mm. The shoulder position of the internal cavity of the cavity corresponds to two curved surfaces. The ball-end milling cutter should be used for machining, and the other plane parts are used. Milling cutter processing. Four through holes symmetrically distributed around the cavity can be machined separately by an end mill. The quality of the cavity processing determines the quality of the plastic part, so its quality requirements and dimensional accuracy requirements can not be lower than the plastic parts.

In this process, the inside of the cavity is machined first, and the through hole around the cavity is machined. The process is shown in Fig. 6.

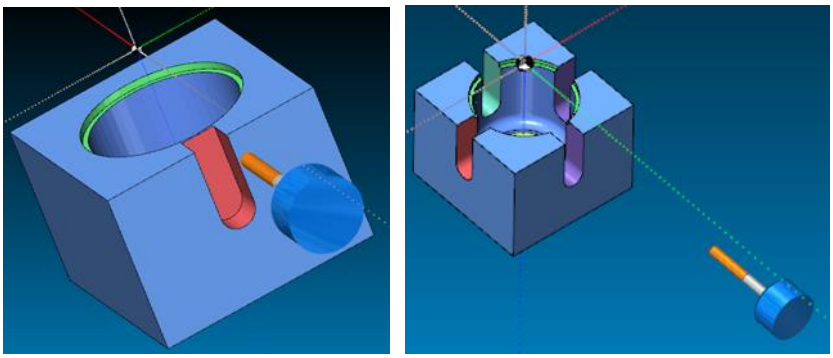

Fig. 6 Cavity CNC machining process

4.2 Cavity numerical control simulation processing code

```
O1200
N10 T0 M6
N12 G90 G54 G0 X48.675 Y0. S800 M03
N14 G43 H0 Z200. M07
N16 G1 Z107.5 F600
N18 G17 G2 I-48.675 J0. F450
N20 G1 X43.675
```

5. Summerize

This design uses SolidWorks software to complete the drawing and assembly process of the three-dimensional parts in the design and processing of the fire extinguisher cover injection mold, and uses Auto CAD to complete the drawing of related parts and assembly drawings, and the cavity of the plastic part is carried out. Numerical control simulation processing. Through CAD/CAM technology, it successfully compensates for the shortcomings of traditional mold design methods, reduces the production cost of molds, improves mold production efficiency, and provides a theoretical basis for actual production.

References

[1] WeiChunlei, Zhu Sanwu, Zhang Nan. Handbook of Graduation Design and Design for Mold Specialty [M]. Tianjin Tianjin University Press, 2010.1: 202-335

[2] CAD/CAM/CAE Technology Alliance. SolidWorks2014[M]. Beijing: Tsinghua University Press, 2014.3: 49-280

[3] LiKailing.Design and manufacturing technology of modern injection molds[M].Beijing: Tsinghua University Press,2011.7:68-288.
[4] Luo Zhigao, Chen Jiazhen. Plastic molding process and mold design [M]. Beijing: Mechanical Industry Press, 2004.8:4-191
[5] Wu Shengxu. Handbook of Plastic Mold Design [M]. Beijing: Mechanical Industry Press, 2010.2:58-363
[6] Liu Xiaoqin.CAD/CAM Design of Fan Blade Injection Mold[J].Lanzhou:Journal of Lanzhou Jiaotong University,2012.6-0123-03:123-125