Structural design and modeling of small road sweeper

Peng Yang [a], Shuzhen Li [b]

School of Shangdong university of Science and Technology, Qingdao 266590, China.

[a]1500541791@qq.com, [b]531606534@qq.com

Abstract

The design is mainly for mechanical transmission drives and compact road sweeper designed and related checking calculation. First, according to the work required to select a motor drive current, and the motor power is calculated; Then, the mechanical transmission of some key components, such as gears, pulleys, sprockets, shafts, bearings, design and checking calculation; Finally the sweeper designed for modeling and assembly of the parts.

Keywords

Road sweeper, Mechanical transmission, Motor power.

1. Introduction

As one of the sanitation equipment, the sweeper is a new type of high-efficiency cleaning equipment that integrates road cleaning, garbage collection and transportation. It is widely used in cleaning and cleaning of important places such as highways, airports, municipal squares and urban residential areas. [1] Small cleaning equipment is a new type of cleaning equipment developed in recent years and is an important aspect of road cleaning. Not only the design and production are simple, but also the operation is simple and easy to learn, and the efficiency is high.

2. Overall design

This design is designed and calculated for the drive part and mechanical transmission part of the small sweeper. Among them, the driving method adopts DC motor and horizontal installation; the mechanical transmission part adopts various transmission modes such as belt transmission, chain transmission and gear transmission. The specific design scheme is shown in Figure 1.

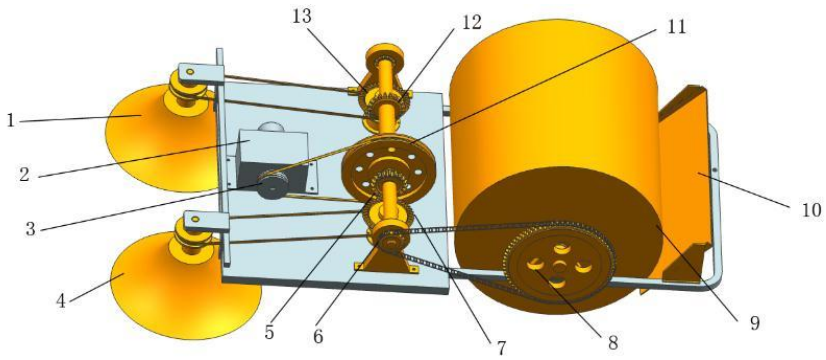

Figure 1

1-side brush 2-motor 3-small pulley 4-side brush 5-small bevel gear 6-small sprocket 7-large bevel gear 8-large sprocket 9-drum

10-guide scraper 11-large pulley 12 - Small bevel gear 13 - large bevel gear

3. Motor selection

3.1 Selection of motor types

According to the working power of the motor, the motor can be divided into a DC motor and an AC motor; the motor can be divided into a DC motor, an asynchronous motor and a synchronous motor according to the structure and working principle. DC motor can realize frequent speed regulation and braking, and it is convenient to adjust speed. It can also withstand some frequent impact loads and has strong overload capability. This design selects a DC motor, which is mounted horizontally and is hermetic.

3.2 Calculation of motor power

The calculated power formula for the motor : $P_0 = {(2P_{1'} + P_1)}/{n}$, The cleaning material selected was a nylon material. Assume that the force of the side brush of the front end is F = 60N, the rotation speed $n_1 = 100\, r/\min$. The roller cleaning force is F_2 = 60N and the rotation speed is $n_2 = 100\, r/\min$.

Disk brush torque $T_1 = F_1 R_1 = 60 \times 0.2 = 12 N \cdot m$

Required power $P_1 = \dfrac{T_1 n_1}{9550} = \dfrac{12 \times 100}{9550} = 125.65W$

The belt brush is driven by the belt to the bevel gear, and the transmission efficiency is 90%.The power at the III axis of the transverse bevel gear is:

PIII= $P_1/\eta = 125.65/0.9 = 139.6W$

Torque at the shaft of the drum: $T_2 = F_2 R_2 = 60 \times 0.3 = 18 N \cdot m$

The power: $P_{II} = \dfrac{T_2 \cdot n_2}{9550} = \dfrac{18 \times 100}{9550} = 188.5W$

The roller to the drive shaft I shaft is driven by a sprocket, and the transmission efficiency is 90%. $P_{I} = P_{II}/\eta = 188.5 \div 90\% = 209.4W$

The Motor output power $P_0 = {(2P_{1'} + P_1)}/{n} = \frac{2\times146.95+125.65}{0.9} = 466W$

Since the working speed of the sweeping machine is 100r/min for the lower speed, the 12V 500W geared motor is selected, and its output speed is 1200r/min.

4. Design of mechanical transmission part of sweeper

4.1 Transmission ratio assignment

The basic principle of gear ratio distribution is that the load carrying capacity of the drives of each stage is approximately equal and the gear unit can obtain the minimum weight [2].

The rotation speed of the motor and the transmission ratio of the main brush 13 :

$$i = \frac{n_{power}}{n_{brush}} = \frac{1200}{100} = 12$$

The transmission ratios of the various stages are distributed as follows: the transmission ratio from the motor to the I-axis is $i_{12} = 3$. The transmission ratio from the I-axis to the II-axis is $i_{23} = 4$. The total transmission ratio from the I-axis to the front-end brush is 4, and the transmission ratio from the I-axis to the III-axis is taken. Then since the total gear ratio is 4, then the ratio of the III axis to the front brush $i_{45} = 2$.

4.2 Calculation of motor to I-axis pulley

(1) Determine the calculation power

The calculated power P_{ca} is determined based on the delivered power P and the operating conditions of the belt.

$P_{ca} = K_A P = 1.0 \times 466 = 466W$

(2) The selection of V-belt type

According to the calculated power P_{ca} and the small pulley speed n_3, the type of the common belt is selected as the type Z.

The reference diameter of the primary pulley d_{d1}, the reference diameter of the small pulley $d_{d1} = 80mm$.

$$v = \frac{\pi d_{d1} n_3}{60 \times 1000} = \frac{\pi \times 80 \times 1200}{60 \times 1000} = 5.02\, m/s,$$

$5\, m/s < v < 25\, m/s$ the belt speed is suitable because the belt speed is low, and the wheel material can be selected as the HT150.

(3) Calculating the reference diameter of the large pulley

$d_{d2} = i d_{d1} = 3 \times 80 = 240mm$, $d_{d2} = 250mm$

(4) Determine the center distance a and base length of the belt L_d

According to $0.7(d_{d1} + d_{d2}) \le a_0 \le 2(d_{d1} + d_{d2})$, the initial center distance $a_0 = 400mm$. the required reference length :

$$L_{d0} \approx 2a_0 + \frac{\pi(d_{d1} + d_{d2})}{2} + \frac{(d_{d2} - d_{d1})^2}{4a_0}, L_{d0} \approx 2 \times 400 + \frac{\pi(80 + 240)}{2} + \frac{(240 - 80)^2}{4 \times 400} \approx 1318mm,$$

the actual center distance: $a = a_0 + \frac{L_d - L_{d0}}{2} = 400 + \frac{1250 - 1318}{2} = 366mm$

(5) Checking the wrap angle on the small pulley α_1

$$\alpha_1 \approx 180^0 - (d_{d2} - d_{d1})\frac{57.3^0}{a} = 180^0 - (240 - 80)\frac{57.3^0}{366} \approx 155^0 \ge 120^0$$

So the wrap angle satisfies the condition.

(6) Calculating the minimum value of the initial tension of the belt $(F_0)_{\min}$

Checking the cross-section size of the ordinary V-belt to obtain the mass per unit length of the z-belt is $q = 0.06\, kg/m$ by the formula:

$$(F_0)_{\min} = 500\frac{(2.5 - k_\alpha) p_{ca}}{k_\alpha z v} + qv^2 \quad \text{so } (F_0)_{\min} = 56.11N$$

(7) Calculating the axial force

The minimum value of the axial force:

$$(F_p)_{\min} = 2z(F_0)_{\min} \sin\frac{\alpha_1}{2} = 2 \times 1 \times 78.87 \times \sin\frac{155^0}{2} = 154N$$

(8) Structure design of the pulley

When designing the pulley, the quality must be small and uniform, and the process should be better. The working surface with the contact surface should be processed with high precision, reduce the wear of the belt and reduce the internal stress of the belt as much as possible. Then the large pulley adopts the orifice plate type, so the small pulley selects the solid structure [3].

5. Modeling of each component

5.1 Modeling of bevel gears

In this design, the gear is a straight bevel gear to achieve the direction of motion. The specific model of the bevel gear is shown in figure 2.

Figure 2 Solid modeling of bevel gears

5.2 Modeling of pulley

The transmission of motor power to the spindle and the transmission of power to the front brush are all belt drives. The specific models of pulley are shown in figure 3.

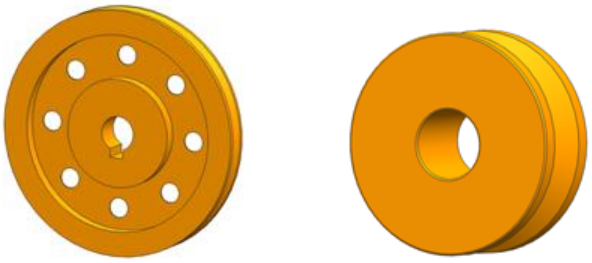

Figure 3 Solid model of pulley

5.3 Modeling of the roller

The roller is an important part in the cleaning machine. The design size of the roller directly affects the working effect of the cleaning machine. The diameter of the roller of the cleaning machine is 660mm, the material of the roller is Q235, and the outer surface of the roller is covered with a brush for easy cleaning. The solid figure of the drum is shown in Figure 4.

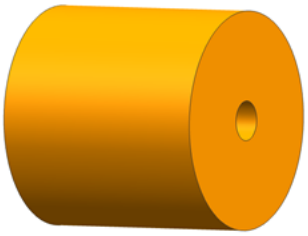

Figure 4

5.4 Frame modeling

The structure of the frame and the selected materials are all affecting the cleaning efficiency of the sweeper and affecting the operation and stability of the sweeper.Since the rectangular steel has the same bending torque as the prototype steel, it has a lighter mass. Therefore, the steel of the frame column is selected from a rectangular steel pipe having a side length of 40 *mm* and a hollow wall thickness of 3.5 *mm*, and the cross-sectional area of the steel material is 4.9 cm^2 . The motor, battery, shaft, pulley and other transmission mechanisms should be placed on the floor of the frame. Therefore,

the hot-rolled square steel with higher strength is selected, and its size is 1320*mm*×563*mm*×20*mm*. The specific modeling is shown in Figure 5.

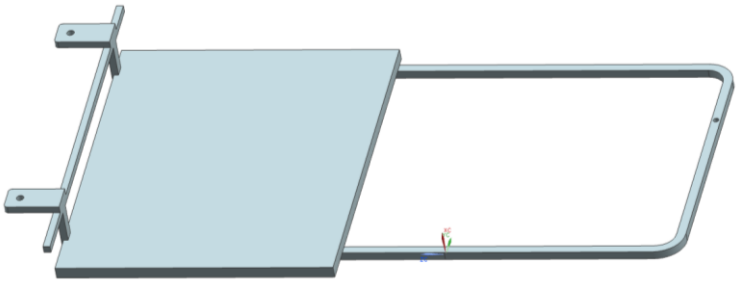

Figure 5 Solid model of the frame

6. Conclusion

The small road sweeper can clean all kinds of garbage, and the side brush can conveniently clean the corner of the wall and close to the obstacle. At the same time, since there are two side brushes on both sides, the width of the cleaning is increased, and the cleaning radius is not changed. If you choose a large-capacity battery and a large-capacity garbage bin, the cleaning machine designed by this scheme has higher work efficiency, better cleaning effect, and can work for a long time. The cleaning machine can be used as a cleaning tool for large areas such as campuses, courtyards, factories, and communities, and meets the cleaning requirements.

References

[1] Lei Xiaotong, Zhang Hui. Structural design and analysis of small garbage sweeper[J]. 2013 (8):835-838.
[2] Cai Hongyu.Distribution of gear ratio in the design of external meshing involute cylindrical gear reducer[J].2011(1):23-25.
[3] Yu Huili,Xiang Jingzhong, Zhang Chun yi. Mechanical Design [M]. Beijing: Science Press, 2013.