Simulation Analysis of Lifting Device in Stiffness and Strength

Donghua Li

University of Science and Technology Liaoning, Anshan 114051, China

493308176@qq.com

Abstract

This article mainly completes simulation analysis of stiffness and strength for wire bundling machine which design. It primarily uses simulation software to complete the simulation of wire bundling machine lift mechanism, cleverly combining the advantages of multiple software, improving the efficiency of analysis. Analysis of process is doing dynamics analysis of the lift mechanism，getting force trend during lift mechanism rising. According to the analysis results, strength and stiffness analysis determine the rationality of design.

Keywords

Lift Mechanism, Strength Simulation Analysis, Stiffness Simulation Analysis.

1. Introduction

Method of modern mechanical design is commonly used in the field of mechanical design now[1-3],It uses the variety of simulation software to verify and optimize the design proposal, and shorten design cycles, improving design quality.

2. Analysis of initial parameters

Initial parameters for analysis of design model are shown in Tab.1.

Tab. 1 Design’s the initial parameters

Initial parameters	Value
Hydraulic cylinder travel(/mm)	350
Maximum oil pressure(/MPa)	16
Wire coil length(/mm)	2000
Wire coil outside diameter(/mm)	1450
General wire coil weight(Kg)	2000

3. Mechanical mechanism analysis

Structure diagram as shown in Fig.1. The Mechanism has 9 active members, 12 rotating pairs, 1 mobile pairs, a total of 13 low pairs, the calculation can be obtained the degree of freedom of the planar mechanism is 1.Because the mechanism has a primary moving part, it is available that the number of original moving parts of the planar mechanism equals the number of degrees of freedom of the mechanism, and the mechanism has a definite movement.

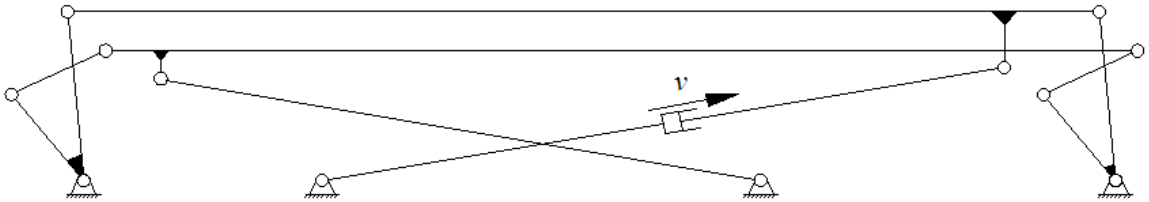

Fig. 1 Structure diagram

4. Analysis of constraint trend in lift process for lift mechanism [4-5]

4.1 Defining modeling environment

First: defines the coordinate system, in the default case, cartesian as a global coordinate system, and the coordinate system fixed on the ground; Second: set the unit of measurement, setting the model units to MMKS by using the Setting/Units command; Third: difine gravity, global acceleration direction setting direction for the y axis, acceleration is 1g by Setting/Gravity command.

4.2 Create key points

The key points is is the basis of constituting parts. Geometric point is the basis of creating geometry, geometric point created as shown in Fig.2.

4.3 Establishment of part model

According to preliminary design of lift mechanism, setting up of simulation model, obtaining complete lift mechanism model is shown in Fig.3; Modify properties in body which is established, all geometry model's material properties select “Steel” in “Material Type”.After determining material properties, clicking “Show calculated inertia …”, the system will calculate the parameters values directly, including volume, mass, moment of inertia and product of inertia in parts.

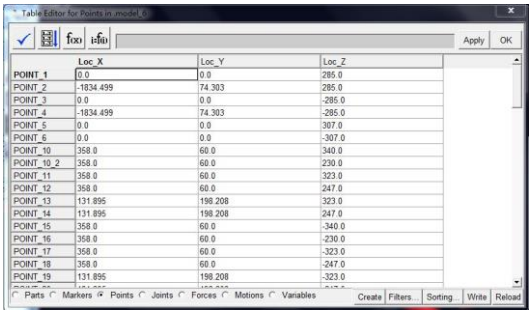

	Loc_X	Loc_Y	Loc_Z
POINT_1	0.0	0.0	285.0
POINT_2	-1834.499	74.303	285.0
POINT_3	0.0	0.0	-285.0
POINT_4	-1834.499	74.303	-285.0
POINT_5	0.0	0.0	307.0
POINT_6	0.0	0.0	-307.0
POINT_10	358.0	60.0	340.0
POINT_10_2	358.0	60.0	230.0
POINT_11	358.0	60.0	323.0
POINT_12	358.0	60.0	247.0
POINT_13	131.895	198.208	323.0
POINT_14	131.895	198.208	247.0
POINT_15	358.0	60.0	-340.0
POINT_16	358.0	60.0	-230.0
POINT_17	358.0	60.0	-323.0
POINT_18	358.0	60.0	-247.0
POINT_19	131.895	198.208	-323.0

Fig. 2 Create point table

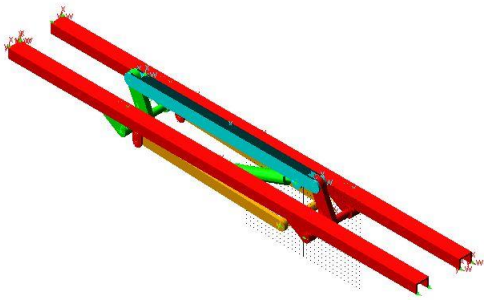

Fig. 3 Lift mechanism model

4.4 Add constraint, load and drive

Adding constraint has three main types in design: revolute joint、translational joint and fixed joint. Lift mechanism is used primarily to lift the 2t wire coil. In order to realize the simulation of functional mode, adding 1t force on the top of the design model both sides, its direction is straight down, Value of force is 9800N.Adding drive is primarily translational joint motion, the drive names Motion_1, setting hydraulic cylinder working travel time is 10s, the cylinder rod moving time is 10s, linear motor speed is 35mm/s.

4.5 Analysis of constraint trend

Sets running time is 10s, and running step is 50.After running, it makes force analysis for mechanismal constraint points by taking advantage of ADAMS/Postprocessor. Joint _1 and joint_2 constraints curves are shown in Fig.4.

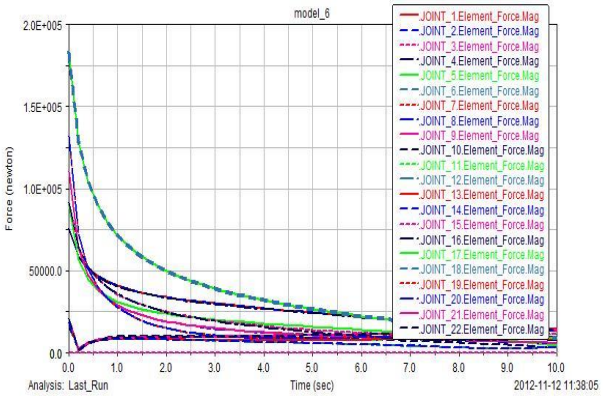

Fig. 4 Joint constraint curves

When t=0s, Joint_1 and joint_22 constraint are maximum value from Fig.3.So the lift mechanism is in the lowest position, parts in the mechanism force value is maximum. Joints constraint maximum are shown in Tab.2.

Tab. 2 Joint constraint maximum(/N)

Joint	Maximum	Joint	Maximum
Joint_1	75929.7599	Joint_12	18578.8007
Joint_2	75926.6078	Joint_13	18619.0765
Joint_3	264.0969	Joint_14	18561.5593
Joint_4	75576.3169	Joint_15	91343.2617
Joint_5	90399.7914	Joint_16	91295.547
Joint_6	1.1013E+005	Joint_17	1.8261E+005
Joint_7	1.1015E+005	Joint_18	1.8261E+005
Joint_8	1.101E+005	Joint_19	1.32E+005
Joint_9	1.1012E+005	Joint_20	1.32E+005
Joint_10	15874.0847	Joint_21	20872.4246
Joint_11	18636.2498	Joint_22	20833.1751

4.6 Setting Analysis of Parameters [6]

First, it runs analysis settings, includes: gravity, constraints, loads. It Sets gravity acceleration to y Component, it values -9806.6mm/s^2; Adding constraints is fixed constraint, it adds in the lift mechanism base; Add pressure load in the position which is in contact between support rollers and wire coil values 2.598MPa; Add pressure load in cylinder rod's load surface values 16MPa which can withstanding the maximum oil pressure for hydraulic cylinders. If under the maximum oil pressure,

strength of the mechanism would meet the requirement, then in the normal oil pressure, strength of the mechanism must meet the requirement.

4.7 Results Analysis

Equivalent stress is shown in Fig. 5, maximum stress occurs in the sleeve which is on the shaft between short connecting rod and the lifting roller table, it values 129.18MPa.

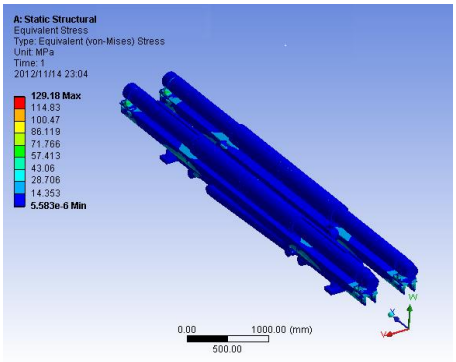

Fig. 5 Equivalent stress

Safety factor is the ratio of stress limit to working stress, it is shown in equation 1.

$$S = \frac{\sigma_S}{F} \tag{1}$$

For the design model, S=3.56>1, the strength of the mechanism meets the requirement.

Deformation is shown in Fig. 6, maximum deformation occurs in middle force's zone, maximum deformation values 3.7721mm, length of lifting roller values 5294mm, then maximum deformation is much smaller than part's length, it belongs to the micro-deformation, the value of deformation within the permissible deformation, the stiffness of the mechanism meets the requirement.

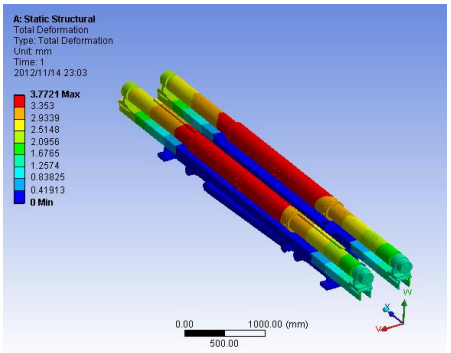

Fig. 6 Deformation

5. Conclusion

It draws the conclusions from the cloud figure, under the maximum oil pressure which the hydraulic cylinder can withstand, when it adds load that is equivalent to 2t wire coil, the Analysis of maximum stress values 129.18MPa, according to calculation of safety factor, the strength of the lift mechanism meets the requirement. Maximum deformation of the lift mechanism values 3.7721mm, it occurs in middle force's zone, and maximum deformation is much smaller than part's length, the stiffness of the lift mechanism meets the requirement. So the strength and stiffness of the design model meet the requirements.

References

[1] Xi Junjie. Development and Application of Virtual Prototyping Technology. Manufacturing Automation, 2006(11):19-22.

[2] Shen Chengjun, Liu Xiaojuan, Sheng Liwei. Research Progress and Development Trend of Virtual Prototype Technology. Journal of Agricultural Mechanization Research, 2008,8:234-236.
[3] Wang Kan, Yang Xiumei. Summary of the Virtual Prototype Technology. New Technology & New Process, 2008(3): 29-33.
[4] YU Peng, WANG Pei un, LI Bao qing, XIA Huan. Design and Simulation Analysis of 3-DOF Motion Platform. Machinery Design Manufacture, 2015 (1):180-183.
[5] Wang Dong, Kong Xiangfen, Cheng Bo, Zhang Jun. The Analysis and Simulation of The Main Landing Gear Mechanism of B737 Aircraft. Science and Technology Innovation Herald, 2016 (3):10-13.
[6] ZHANG Hongwei, FENG Chao. Simulation analysis of stiffness and strength of bridge crane structure based on finite element method. Computer Aided Engineering,2013,22(S1):274-278.