Study on the control and application of the hydraulic AGC system for thick plate mill

Tie Feng, Mingqiang Gao

University of Science and Technology LiaoNing, Anshan 114051, China

Abstract

The hydraulic AGC system is a hydraulic servo system, which controls the displacement of the oil cylinder of the hydraulic cylinder by controlling the servo valve, and realizes the automatic control of the thickness of the rolled products. The paper will combine a thick plate production line, introduction of the composition of hydraulic AGC system, the control principle and control strategy of pressure AGC.

Keywords

Hydraulic AGC, plate thickness deviation, pressure AGC, closed loop control.

1. Introduction

Hydraulic AGC (Automation Gauge Control) automatic thickness control of hydraulic pressure. At present, hydraulic AGC has been widely adopted in domestic and international rolling steel system. It has the advantages of high control accuracy and fast response , It is a powerful means to control the thickness of the finished products to eliminate the deviation from the thickness of the rolling mill and the workpiece. It plays a key role in improving the quality of the rolled products, so as to finish the online control of the rolling process with high accuracy and achieve highly automation.

2. Organization of the Text

2.1 The composition of the hydraulic AGC system 2.1.1 Sub-section Headings

The hydraulic AGC system of the thick plate plant is installed on the 4300mm four roll reversible mill (as shown in Figure 1).

The whole system can be divided into two parts as a whole:

1) hydraulic servo system. Include:

Circulating pump device. 2 circulating pumps, of which 1 work, 1 spare. Its main function is to keep the oil in the tank and the external pipeline to reach the standard of NAS7 grade pollution.

High pressure pump device. Three high pressure pumps,of which two work, one spare. Its main function is to adjust the oil pressure of the system (high pressure 31.5MPa, low pressure 3.5MPa; in addition, it plays the role of pressure and circulation of the system. "

Valve frame. The valve frame includes the solenoid valve, the back pressure loop, the liquid controlled one-way valve opening and closing the loop. It is directly controlled by the control system.

The control of the hydraulic servo system includes: The starting, stopping and switching of the high pressure pump and the circulating pump; High and low voltage switching of high pressure pump; Rapid roll gap switch; Detection and alarm of high and low pressure switching of back pressure, oil temperature, oil pressure, flow and so on. This system is the power system of the hydraulic AGC system, which is the prerequisite and guarantee for the realization of AGC control.

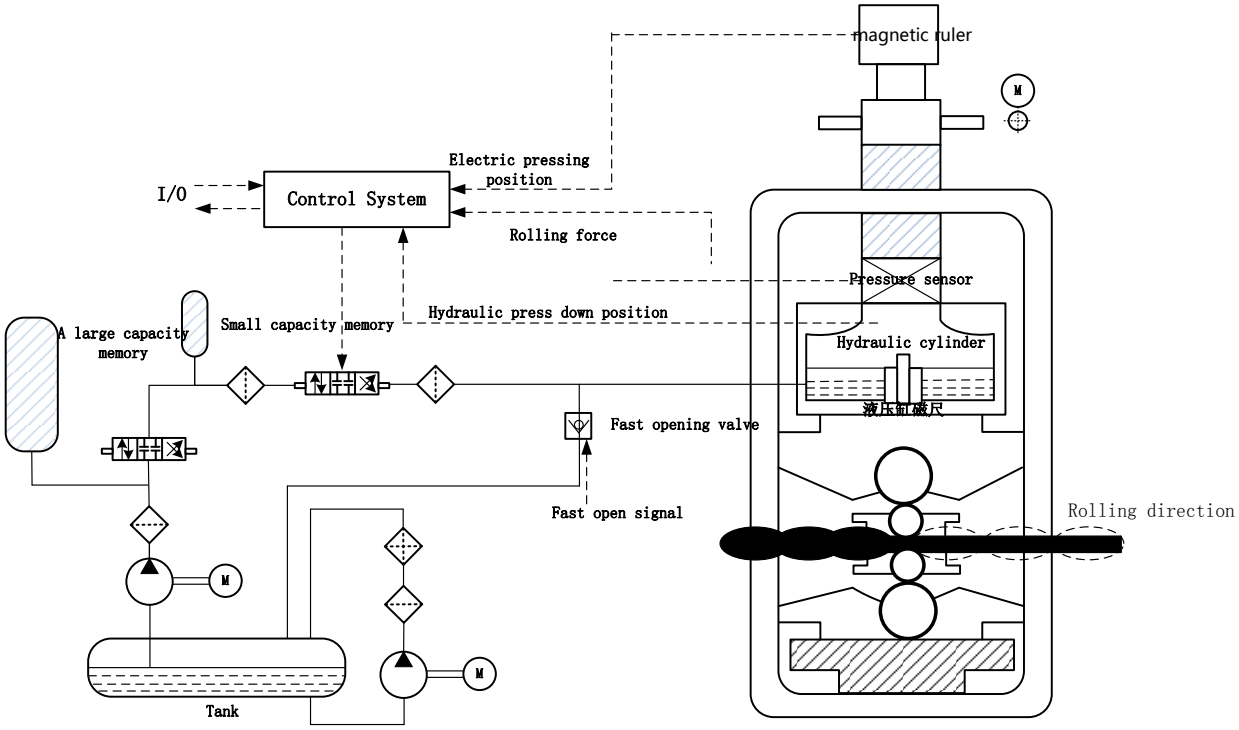

Fig 1 Hydraulic AGC system diagram

2) Plate thickness control system. Include:

Measuring equipment. There are pressure sensors and magnetic ruler. Among them, the pressure sensor (Load Cell) is used to detect the rolling force signal, and the magnetic ruler is divided into the hydraulic cylinder magnetic ruler and the top cap magnetic ruler to detect the position signal. The two are the necessary conditions and basis for AGC control.

Control equipment. It is mainly servo valve, that is to control the opening, closing and opening position of the servo valve, adjust the flow of the hydraulic system and the displacement of the oil cylinder, so as to eliminate the deviation of the product thickness, so as to achieve the purpose of AGC control.

The thickness control system functions of hydraulic reduction, setting, display, protection and communication. It is the core of the hydraulic AGC system and the key to realize AGC control.

2.2 The principle of hydraulic AGC control

There are a variety of AGC control methods, such as feedforward AGC and pressure AGC, and supplemented by oil film compensation, which ensures the precision of plate thickness control. This paper focuses on the pressure AGC (BISRA AGC).

The rolling mill is the same as the rolled piece, all of which are elastic objects. According to the rolling theory, during the rolling process, due to the factors such as the thickness, temperature and composition of the rolled piece, the plastic deformation of the rolled piece is produced, and the elastic roll jump also occurs. The expansion of the rolling mill directly affects the thickness of the rolling mill exit and causes the plate thickness deviation. The purpose of the use of pressure AGC is to eliminate this deviation.

The mill roll elastic deformation for linear processing, then get rolling mill elastic deformation formula:

$$h = S_0 + \frac{P}{KM} \tag{1}$$

h Thickness of exit side of mill;

S_0 No-load roll gap (set roll gap);

P Mill rolling force;

KM Rolling mill constant.

While the exit side plate thickness h and target thickness, h_0 thickness deviation h the following relationship:

$$\Delta h = h - h_0 \tag{2}$$

We can get the thickness deviation of H formula is as follows:

$$\Delta h = \left(S + \frac{P}{KM}\right) - \left(S_0 + \frac{P_0}{KM}\right) = (S - S_0) + \frac{P - P_0}{KM} = \Delta S + \frac{\Delta P}{KM} \tag{3}$$

S Measure value of roll gap;

P_0 Locking value of rolling force.

According to the technical requirements, in order to eliminate the plate thickness deviation, the mill has as much rigidity as possible. The greater the rigidity of the mill, the smaller the thickness deviation of the plate; Howver, in some cases, in order to get a good shape, the rigidity of the rolling mill is not too big, so the two parts have a contradiction. If it is difficult to mechanically change the inherent rolling constant, so in order to meet the different needs of the production process, we must adopt a variable rate control of rolling mill, that is to introduce an adjustment rate— C. $\frac{KM}{1-C}$ that is the same as the usual rolling mill constant: When C=1, the rolling mill constant is infinitely large, which means that the rolling mill has an ideal rigidity; when C=0, it is an inherent rolling mill constant. The variation range of the C value of the adjustment rate is: $0 \le C \le 1$. In this way, a different rolling mill constant can be obtained by setting the C value to change the rigidity (large or small) of the rolling mill. With the introduction of the adjustment rate C, the formula of plate thickness deviation is changed into:

$$\Delta h = \Delta S + \frac{\Delta P}{KM} \times C \tag{4}$$

The hydraulic servo system is the use of this formula, the closed-loop feedback control according to the change of the thickness, in order to eliminate the thickness deviation, so that the H is close to 0. This is the basic principle of pressure AGC.

3. Control strategy of hydraulic AGC system

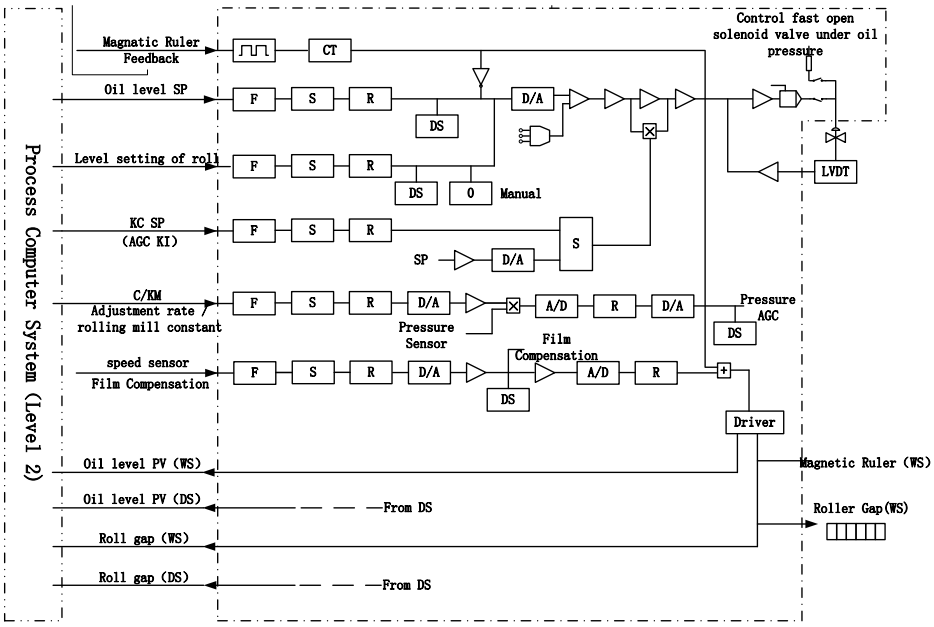

F:Filter S: Select R: Register CT:Counter

Fig2 control block diagram of hydraulic AGC system

The control of hydraulic AGC system center object is a hydraulic cylinder, and it comes from the process of computer system of oil column setting signal and automatic leveling signal from sensor,

magnetic ruler (MSD) of the oil column feedback signal together constitute a CPC control system, it is control system for hydraulic cylinder constant position. The pressure AGC signal and oil film compensation in Figure 2 are sent to the CPC system as compensation, and the thickness deviation is corrected during the rolling process.

A closed loop flow control loop is composed of a servo amplifier, a servo valve, a differential transformer and a feedback amplifier, which is used as the inner loop of the CPC control. Therefore, the whole system is a double loop system: the inner ring is the flow ring, and the outer ring is the position ring of the oil column.

The pressure AGC is to lock the timing of mill elongation as a benchmark, due to the subsequent elongation calculation of rolling force deviation caused by the change, and then convert it into position control, and the control deviation is 0, the resulting pressure correction can ensure the export side plate thickness.

The pressure of the purpose of AGC is to make the thickness deviation of H is 0, this formula (4) into

$$\Delta S = -\frac{\Delta P}{KM} \times C \tag{5}$$

C / KM is obtained in 2 ways: one is when rolling in "automatic" mode, the control system directly received from computer data; the other is in the "local" mode, control system according to the operation of rolling mill mill rigid size selection, C with different initial value, determination by the time of replacing roll mill constant KM, the two division C / KM value.

In 0.5 seconds after biting on the rolling force lock, rolling force as the benchmark P_0, P_0 and rolling process by rolling force signal P pressure sensor to collect the comparison, get the ΔP, $\Delta P = P - P_0$.

The export side plate thickness deviation caused by the variations of rolling force, can be compensated through the positioning control, the amount of compensation as the controlling quantity of servo valve, oil column displacement adjustment of a hydraulic cylinder, to change the size of the gap, so that the plate thickness deviation is 0 and the pressure AGC control, to ensure the export side plate thickness. The control process of pressure AGC is a closed loop regulation process.

4. Conclusion

The input of the hydraulic AGC system greatly improves the precision and quality of the thick plate products, and can make the thickness of the plate less than 0.2mm, and has achieved good economic benefits. This system is in the leading level in world.

References

[1] Wang Jun,Zhang Dianhua, Li Jiangping, Niu Wenyong. Research on hydraulic roll gap control system of plate mill and its PLC implementation [J]. Journal of Northeastern University (NATURAL SCIENCE EDITION), 2001, 22(4): 435-438.

[2] Huzyak P, Gerber T L. Design and application of hydraulic gap control systems [J]. Iron and Steel Engineer, 1984, 61(8): 13 - 20.

[3] Johns R L, Reiner V R, Mengel J D. Hydraulic AGC at Bethlehem's burns harbor 160-in plate mill [J]. Iron and Steel Engineer, 1994, 71 (8): 52 - 57.

[4] Zhang Shuhai, Qi Cuifen, Hou Ribin, Chen Wusheng. Analysis and application of hydraulic AGC system for medium and thick plate finishing rolling [J]. Shandong metallurgy, 2007, 29(3):55-56.