Simulation Analysis of Balanced Circuits Based on MATLAB / AMESim

Liangchao Hou [1, a], Longxin Ma [2, b], Guoteng Yuan [3, c], Hui Li [4]

[1]Shandong University of Science and Technology, Qingdao 266590, China;

[2]Shandong University of Science and Technology, Qingdao 266590, China;

[3]Shandong University of Science and Technology, Qingdao 266590, China;

[4]Shandong University of Science and Technology, Qingdao 266590, China;

[a]931936225@qq.com, [b]1004009592 @qq.com, [c]290899265@qq.com

Abstract

In the hydraulic system analysis, because the traditional mathematical modeling method is more complex, and the results of poor visual. Therefore, this paper uses AMESim and MATLAB to model, configure the system parameters, and run the model after the data obtained by a comprehensive analysis, the results obtained.

Keywords

Hydraulic system ,Balance loop, MATLAB / AMESim simulation.

1. A Brief Analysis of Balance Circuit

In many mechanical equipment, its enforcement agencies for vertical movement, this kind of equipment hydraulic system generally adopts vertical hydraulic cylinder, hydraulic cylinder, whether in work or stops have been larger load. When the hydraulic cylinder is moving downward, it is easy to overspeed and impact because of the load. Therefore, in order to protect the hydraulic system, the balancing valve is usually set on the back oil circuit of the hydraulic cylinder to form a balanced circuit.

Balance circuit is used to balance the same as the direction of fluid pressure of gravity load, when load downward movement, the back pressure in the hydraulic cylinder, is used to balance out the piston and the load of its own gravity, avoid in the process of movement caused by gravity is too large hydraulic cylinder over its own load, load decline at a faster rate than the required speed stalling phenomenon in the process, as well as the impact of hydraulic cylinder and the hydraulic system.

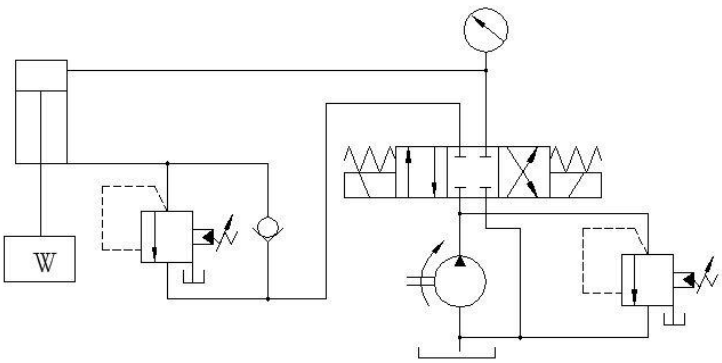

Fig.1 Hydraulic system using a balancing valve

Table 1. The main technical parameters of the system

The slider and the piston weigh W	The piston diameter D	Piston rod diameter d	Sequence valve adjusts pressure Px
25KN	200mm	50mm	3MPa

Based on the given parameters, it can be calculated that the pressure of piston rod and load on the hydraulic cylinder is caused by the piston rod and load.

$$P = \frac{4W}{\pi(D^2 - d^2)} = \frac{4 \times 25 \times 10^3}{\pi(20^2 - 5^2)} = 0.85(\mathrm{MPa}) \tag{1}$$

The adjustment pressure of the sequence valve is 3MPa, and the calculated result is P < Px=3MPa, so the load will not fall.

2. Establish the Simulink model of the system in MATLAB, as follows:

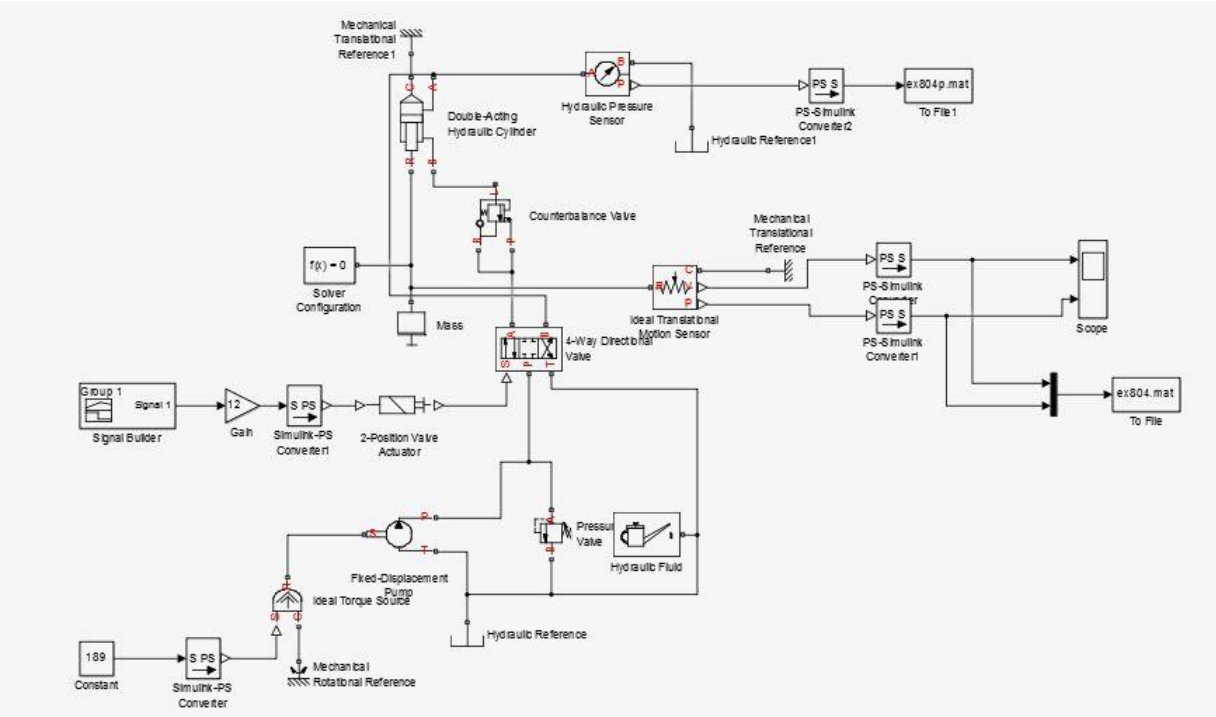

Fig.2 Simulink model of the system

[0-10]s, The reversing valve is in the left position and the piston rod is retracted to drive the object up, [10-15]s, The commutator valve is in the middle position. The object should remain in place due to the existence of the balance valve, and will not be reduced by gravity.

After running the model, the simulation curves shown in fig.3 and 4 are obtained.

By drawing, 1-10s, the piston rod is retracted, driving load up, and the system running smoothly. After 10s, due to the existence of the balance valve, the object ceases to decline, and the pressure tends to balance with the stop of the object, which is the same as the calculation result. The balance loop can realize the required functions.

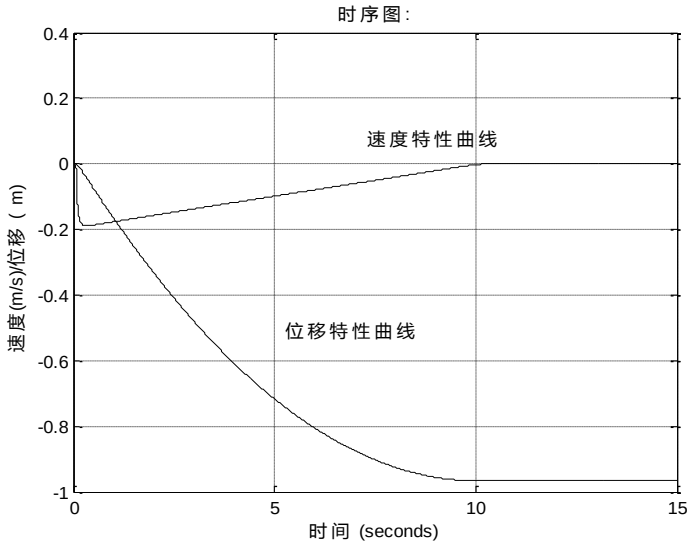

Fig.3 Velocity and displacement curve diagram

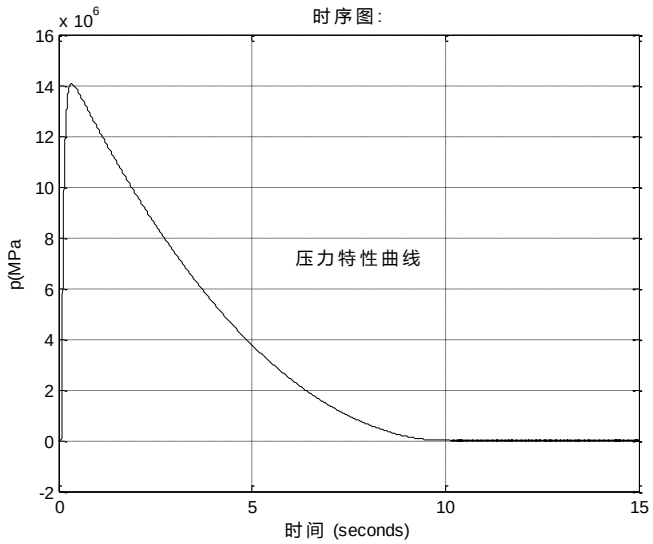

Fig.4 Pressure characteristic curve diagram

3. Establish the physical model of the system with AMESim, as shown in the figure below:

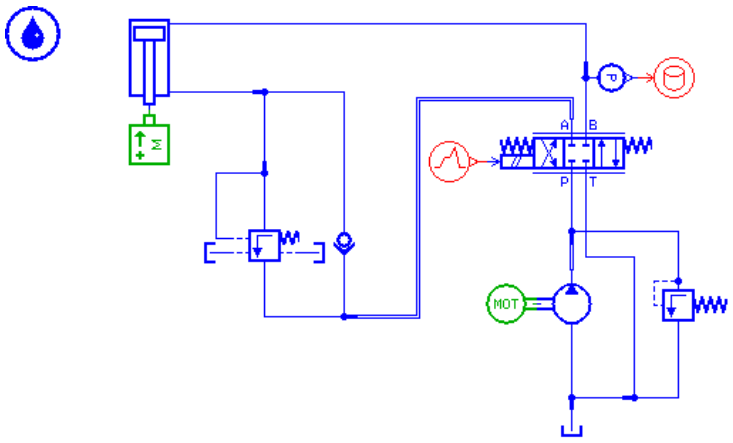

Fig.5 AMESim physical model

To configure the model, the commutator valve [0-8]s is in the power position, when the hydraulic cylinder is entered into the fluid and the former cavity is returned. [9-16]s is in the spring position, and the front cavity of the hydraulic cylinder is in the fluid, and the posterior cavity is returned. [17-24]s is in the middle. Get the simulation curve, as shown by the curve, when the piston rod out of the system running smoothly, no impact and stalling phenomenon, when the piston rod and retract, objects with the piston rod rises slow, stable running, when reversing valve in the median, stop falling objects, the system is stable and will not decline due to load, so the balance valve can have expected effect, make the system stable, avoid the impact and load down.

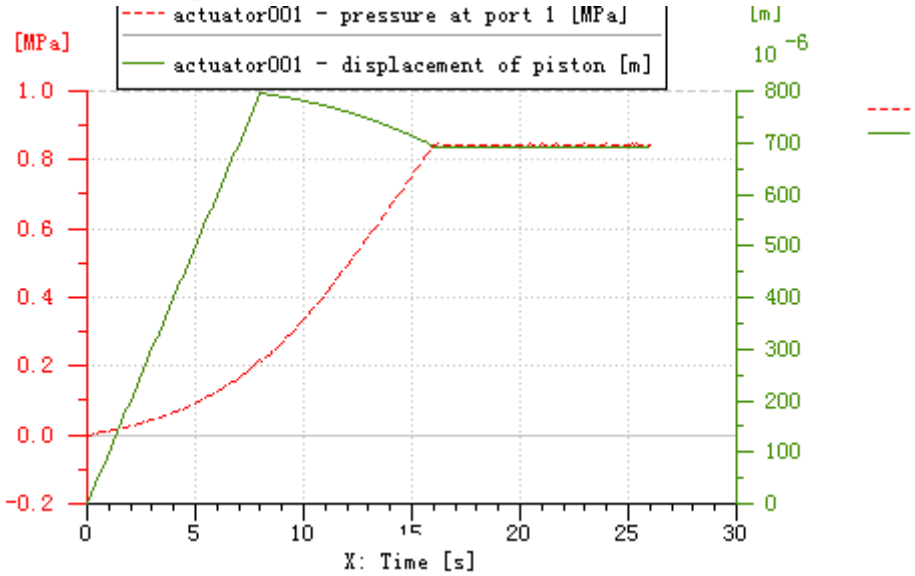

Fig.6 Pressure and displacement characteristic curve

4. Conclusion

Using MATLAB and AMESim simulation software to simulate the equilibrium circuit, the results are as follows:

(1) Simulation software is used to simulate the system model. The results are more intuitive than traditional methods and the data is more accurate.

(2) The hydraulic system can effectively avoid the system impact and improve the stability of the system.

(3) Using the balance loop can form back pressure, which can effectively resist the gravity of the load and piston rod, which is beneficial to the safe and efficient operation of the whole system.

References

[1] WANG Jiwei,ZHANG Hongjia,Huang Yi. Hydraulic Transmission[M]. Beijing, Mechanical Industry Press,2006:100-130

[2] SONG Zhian,ZHANG Xin,SONG Yufeng. Modeling and Simulation of MATLAB / Simulink Electromechanical System[M]. Beijing, National Defense Industry Press, 2015:174-179.

[3] ZHANG Xiaoyu. Modeling and Simulation of Hydraulic Control System Based on AMESim[J]. Coal Mine Machinery, 2011,32(2):71-73.

[4] MING Renxiong,WAN Huixiong. Hydraulic and Pneumatic Transmission[M]. Beijing, National Defense Industry Press, 110-140.