Research on Intelligent Monitoring Instrument for Air Pollution and Corrosion Based on Multistage Dynamic Networking and Remote State Monitoring

Zhenhua Wang [a], Meilin Li [b] and Xueyan Lan [c]

School of electrical and information, Dalian Jiaotong University, China;

[a]wzhhzw1990@163.com, [b]774623496@qq.com, [c]1053017666@ccc.com

Abstract

Air pollution and corrosion monitoring at regular, fixed and quantitative levels are achieved has an irreplaceable role in disaster prevention decision making, climate assessment, atmospheric environmental impact assessment, meteorological information acquisition, and protection of specific metal equipment. Under this background, the intelligent monitoring instrument for atmospheric environment and corrosion based on multipoint dynamic networking and remote state monitoring has been developed, the monitoring instrument integrates hardware, software, network communication and monitoring, with stable performance STM32F103 control board as the core, using the versatile multi-point networking chip, and then to achieve multi-point dynamic networking and remote status monitoring. At the same time, the corresponding software has been developed, which can monitor and manage the front-end system and manage the data, and analyze the results and process the data. The project adopts the intelligent terminal to realize the mobile monitoring, and the external and convenient interface of the extensible sensor and firmware upgrade can realize the function expansion and the control algorithm upgrade conveniently. In order to realize the wide applicability of the subject, the city atmospheric environment and pollutant diffusion and corrosion monitoring model as a sustainable development, so as to realize the monitoring of atmospheric environment and corrosion of compatible and optimize various occasions.

Keywords

Multi-point dynamic network, Remote status monitoring, Environmental monitoring, Corrosive monitoring, Mobile monitoring.

1. Introduction

With the rapid development of economy, urbanization and industrialization are advancing rapidly, car ownership has increased substantially, leading to a significant increase in emissions of industrial waste gases, automobile exhaust gases, and living waste gas, these waste gases enter the atmosphere and participate in atmospheric circulation, after a period of time, some can be eliminated by neutralizing chemical reactions, biological activities, physical subsidence, etc., however, most of them will be gathered in the air, resulting in an increase in concentrations of some or more harmful substances, causing great harm to people, livestock, materials and surfaces. In recent years, the amount of direct and indirect economic losses caused by air pollution is enormous and cannot even give specific amounts, environmental pollution cannot be counted statistically for overt or invisible damage to the health of the human body, and it poses a great threat to the living environment of mankind[1]. In this context, it is necessary to monitor and forecast the atmospheric environment, the intelligent monitoring instrument for atmospheric environment and corrosion based on multipoint dynamic networking and

remote state monitoring can realize the real-time monitoring of sulfur oxides, carbon hydride, nitrogen oxides and micro particles in the atmospheric environment, and upload the data to the host computer, furthermore, we can monitor and manage the front end system, manage and analyze the results and process the data. When the data are accumulated to a certain amount, we can process large data and realize the prediction of atmospheric environment quality[2].

Atmospheric corrosion monitoring is an important aspect of atmospheric environmental monitoring. Atmospheric corrosion is the most extensive distribution of all metal corrosion, one of the most destructive and difficult treatment problems, atmospheric corrosion in a short time can cause changes in the color of the metal surface, and even produce a lot of rust, and has a great influence on the beauty of objects. After a long time, the corrosion depth reaches a certain level, it will cause heavy damage to the strength, hardness and toughness of metals, which will lead to sudden disasters and cause great economic losses[3]. Under this background, has important significance in atmospheric corrosion monitoring, project development of multi-point dynamic network and atmospheric environment remote monitoring and intelligent monitoring system based on corrosion can achieve real-time monitoring of atmospheric corrosion and the image data is uploaded to the supporting PC, the data for further processing.

2. System Structure Design

The intelligent monitoring instrument for atmospheric environment and corrosion based on multipoint dynamic networking and remote state monitoring is mainly composed of four parts, Among them, the host computer of the system module of the relevant data is stored for a long time and do further processing of clustering analysis, data analysis and other data; multi point dynamic network module is mainly used to construct multi node dynamic network and data link through the data chain network, and real-time monitoring information sharing, achieve the fusion of highly cooperative time and space. To improve the speed and accuracy of data transmission in atmospheric environment and corrosion monitoring; remote monitoring module is mainly used for remote monitoring of atmospheric surface corrosion and corrosion image acquisition; work machine intelligent terminal is mainly used for coordinated multi-point dynamic networking module, remote monitoring module, sensor cluster, ensure data acquisition accuracy, data integrity, data link network real-time etc[4].

According to the system host computer module, task using C++ language in VS2008 development environment, data can be stored for a long time, data mining and clustering analysis, data analysis and visualization of alarm and other functions, in addition, also including the corresponding data receiving device; for more dynamic networking module, hardware platform using FPGA algorithm the data link network algorithm based on dynamic multi node network, can realize mobile ad hoc networks in the field of multi node, support text, voice and image transmission; the remote monitoring module, image acquisition hardware platform adopts high precision linear CCD module, the control part adopts AT89C52 minimum system board for the intelligent computer terminal module; and the core control chip STM32F103RBT6, the peripheral circuit includes power module, sensor module, A/D conversion module cluster Block, display module, etc. As shown in figure 1, subject based on the development of more dynamic networking and remote monitoring of the atmospheric environment and the corrosion of the intelligent monitor module division is reasonable, the internal data transfer logic clear, work context orderly, for the miniaturization of measuring device and the actual promotion laid the foundation.

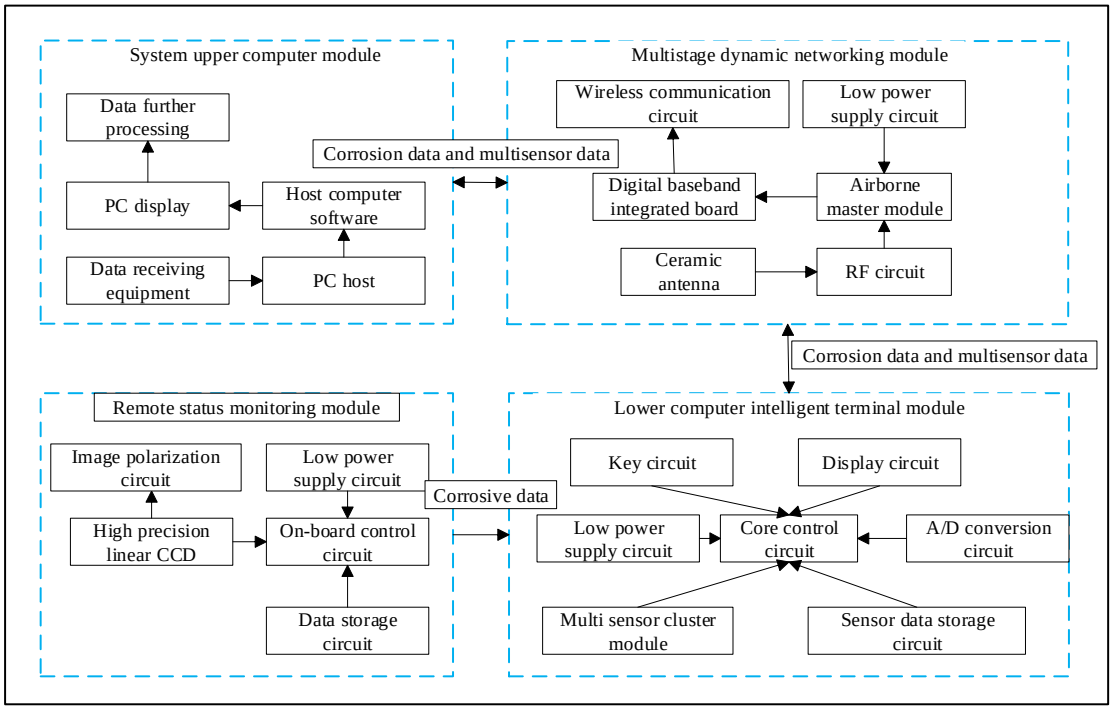

Fig. 1 System overall function diagram

3. Design of System Upper Computer Module

The topic adopts C++ language and develops corresponding host computer under VS2008 environment, the data receiving apparatus receives from multi-point dynamic network module to send the atmospheric corrosion image data and sensor cluster data and real-time upload the data to the host computer, and further can realize fast data statistics and classification, data mining and clustering analysis, and summarizes the rules of visual alarm, partition save etc.. Every time you open the host computer, you should receive the data, select the channel of the device, format the data analysis, otherwise the data upload will fail.

As shown in figure 2, the system PC module work process is as follows: S1: data receiving device on the electric start, self-test and respectively to PC software and more dynamic network communication module to send packet detection, if receive communication detection from PC software and more dynamic networking module package, then that system is working properly; S2: data receiving device in detecting state. When the detected data receiving start after receiving data and temporary storage, receiving the data transmission end after the end of the data transmission; S3: open the PC software data receiving mechanism, data receiving device to the temporary storage of data uploaded to the host computer software, PC software for rapid statistics and classification of data, partition preservation, air pollution control parameter table, if overrun, a visual alarm, rot Erosion images need manual processing; S4: when data are accumulated to a certain amount, the data can be clustered, analyzed, summarized, and analyzed.

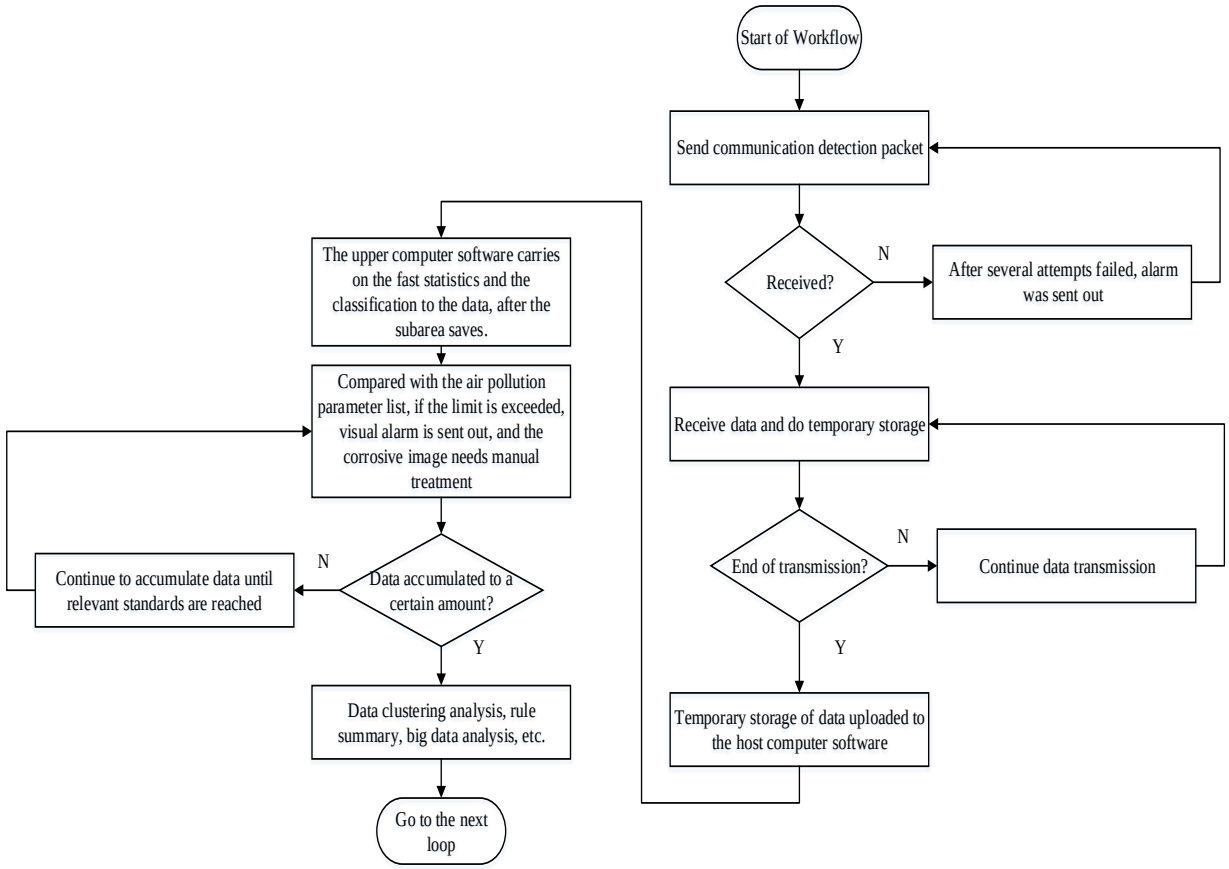

Fig. 2 Schematic diagram of work flow of system upper computer module

4. Design of Multipoint Dynamic Networking Module

Multi point dynamic network module consists of airborne main control module (built-in FPGA chip), digital baseband integrated plate, RF circuit, micro ceramic antenna circuit, low power supply circuit, memory circuit, bidirectional wireless data communication circuit, can realize the data link network based on dynamic multi node network, so as to realize the mobile ad hoc network in the field of multi node, support text, voice and image transmission[5]. The airborne control module adopts the EP4CE15F23I7N type industrial grade FPGA, can control the dynamic process of network, control network node data link connection and disconnection in the network is successful, can control the start of wireless communication circuit corrosion data and multi sensor information cluster data is sent to the host computer system; digital baseband board adopts integrated plate fly think of Carle company, baseband preprocessing function mainly completes the data transmission, including data encoding, channel multiplexing, modulation and channel spread function, through the digital baseband pre processed signals can realize long distance transmission; RF circuit, micro ceramic antenna circuit, wireless communication circuit is used to complete the corrosion data multi sensor data and cluster sending; low power supply circuit can ensure more dynamic networking module long time free maintenance Work, bidirectional storage circuits are used primarily to temporarily store the ready to send corrosive data and multi-sensor cluster data. The diagram of the hardware circuit of the multipoint dynamic network module is shown in figure 3.

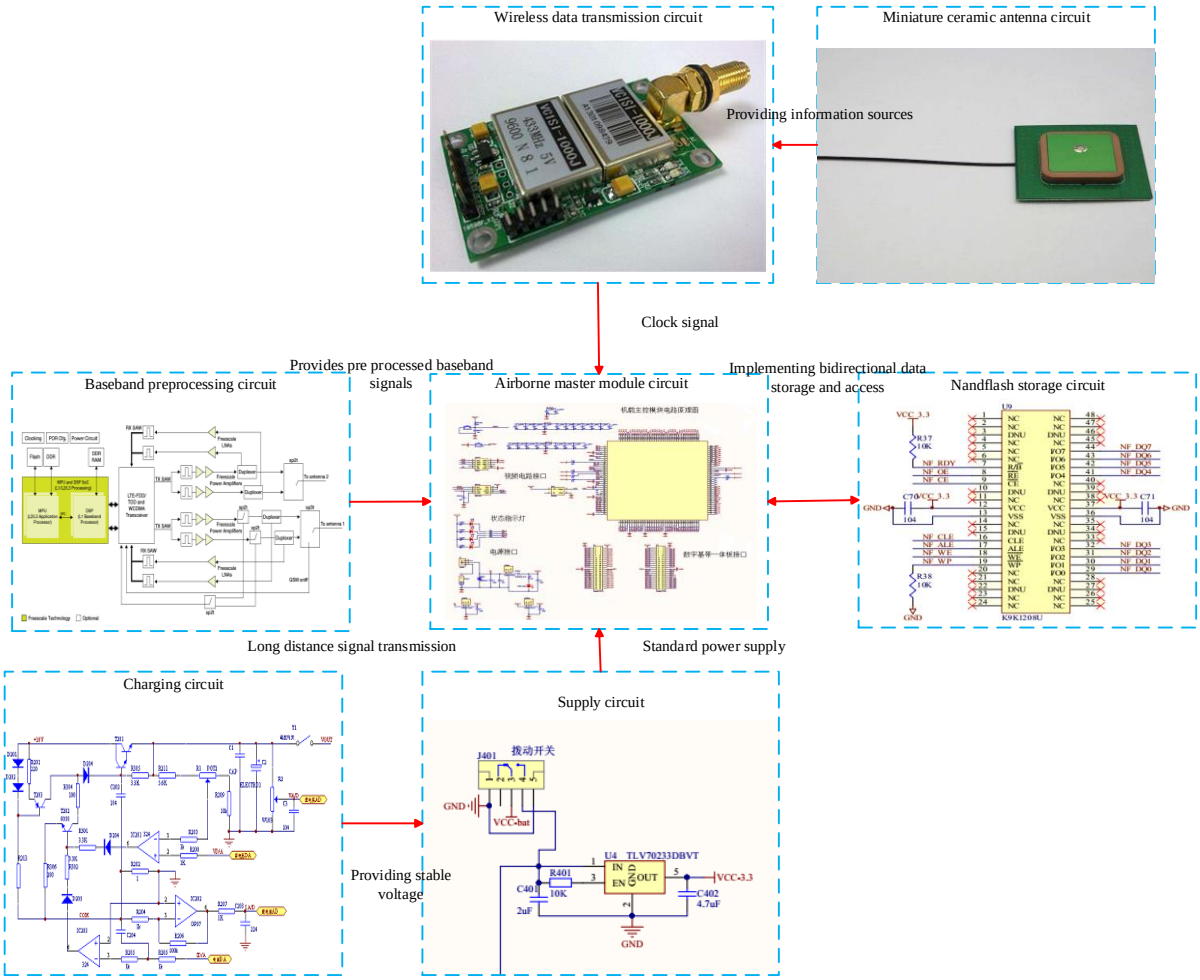

Fig. 3 Hardware circuit diagram of multipoint dynamic network module

Corresponding to multiple point dynamic network module hardware circuit diagram, as shown in figure 4, more dynamic networking module work flow is as follows: S1: electric start self-test self-test after waiting for communication detection from the host computer module package, receive detection package, sent to the host computer module of a same communication to detect the package, since then, both sides to establish communication mechanism; S2: airborne control module more open dynamic network detection mechanism, when the detected network request, sent through the other network application package, resolve each other's ID number, location, data transmission frequency information and make decision on whether to access; S3: if agree with each other with each other to establish network, data link, successful packet airborne main control module to send network; S4: in the process, continue to receive from the slave machine intelligent terminal module The relevant data sent is stored in the bidirectional memory circuit, and when the data in the bidirectional memory circuit is sent to the upper computer module after a cycle, the memory is emptied to the next cycle.

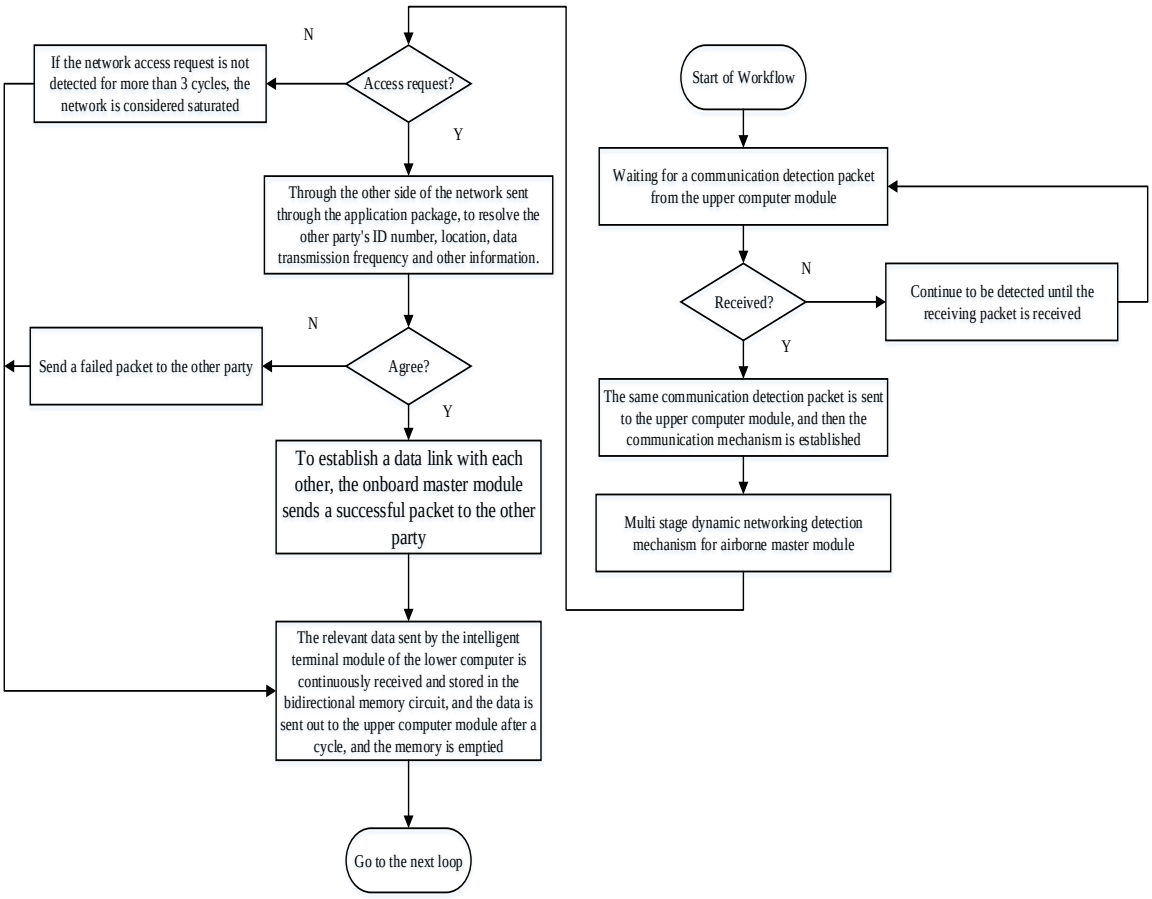

Fig. 4 Schematic diagram of working flow diagram of multipoint dynamic networking module

5. Design of Remote State Monitoring Module

Remote condition monitoring module mainly comprises a control circuit board, high precision linear CCD image acquisition circuit, image polarization circuit, low power supply circuit, data storage circuit, clock circuit, can be achieved on the surface of the object (mainly metal surface) the atmospheric corrosion of the image acquisition and image data stored in the temporary storage module in the circuit, after a certain period, sent to the intelligent computer terminal module after pretreatment and multi sensor information data is transmitted to the multi-point dynamic network module[6]. The onboard control circuit using Freescale MC9S12G minimum system board Carle series, can collect atmospheric corrosion images of a plurality of objects on the surface of the high precision control of linear CCD image acquisition circuit, the image reflecting, through the control circuit can eliminate the reverse polarization image light, so the image quality is greatly improved; high precision linear CCD image acquisition circuit using blue Zhou integrated plate technology, mainly used for atmospheric corrosion of the image acquisition surface and the image stored in the data storage circuit; circuit is mainly used to eliminate polarization image reflection on image quality influence factors; low power supply circuit can ensure the remote monitoring module long time free maintenance work; the data storage circuit is mainly used for temporary storage of atmospheric corrosion of the image data; the clock circuit is mainly used to load control circuit board High precision time pulse is provided. The schematic diagram of the hardware circuit of the remote state monitoring module is shown in figure 5.

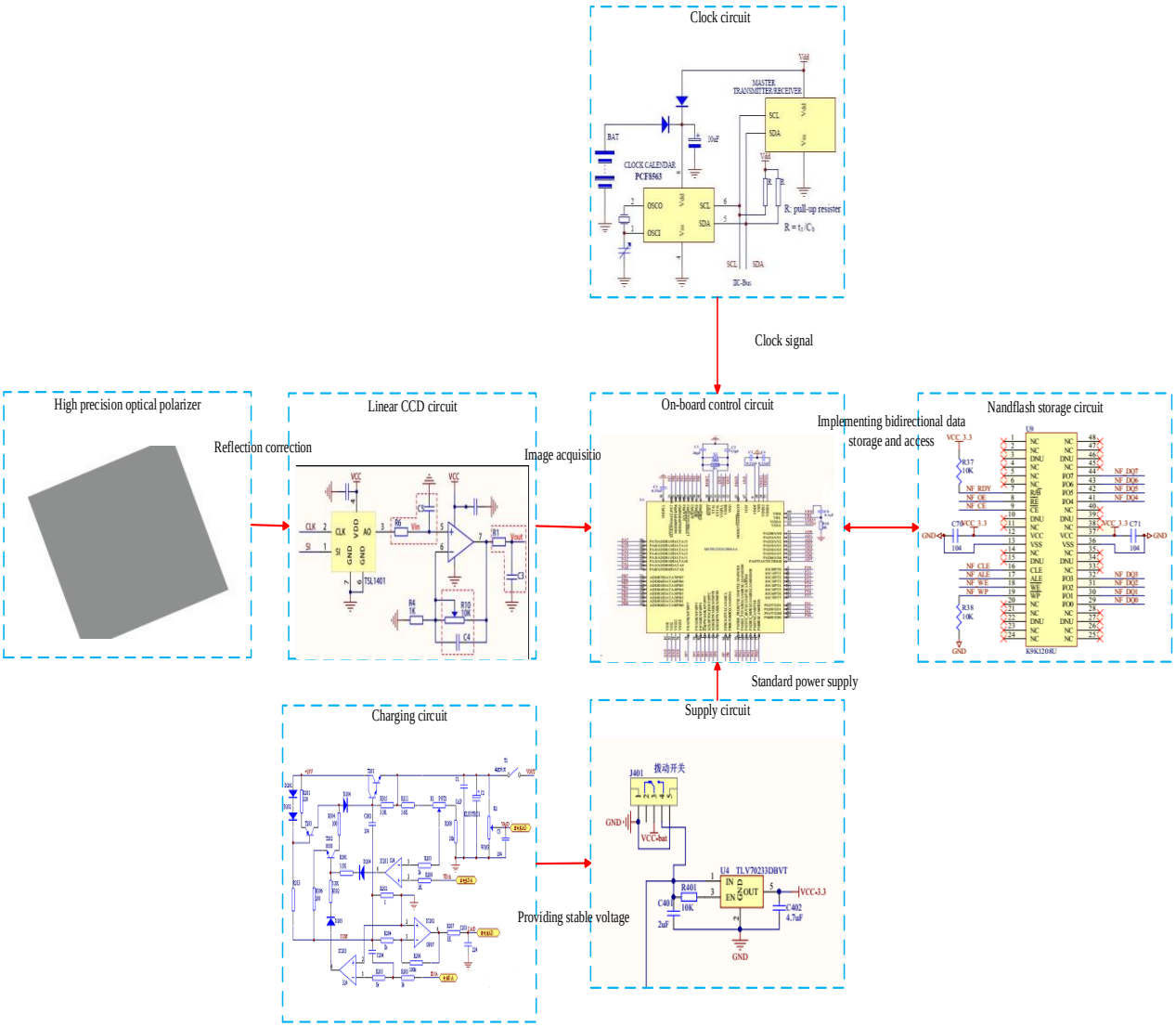

Fig. 5 Hardware circuit diagram of remote status monitoring module

Corresponding to the remote monitoring module hardware circuit diagram, as shown in Figure 6, the remote monitoring module works as follows: S1: start the electric module after the self-test; S2: module self-test after, according to the pulse clock circuit provides the periodic linear CCD control circuit to collect the surface corrosion of the image and stored in in the data storage circuit; S3: when the corrosion image transmission cycle arrival system set, the module to corrosion image data is sent to the computer intelligent terminal module and stored in the corresponding position; S4: data storage circuit to empty memory, into the next cycle[7].

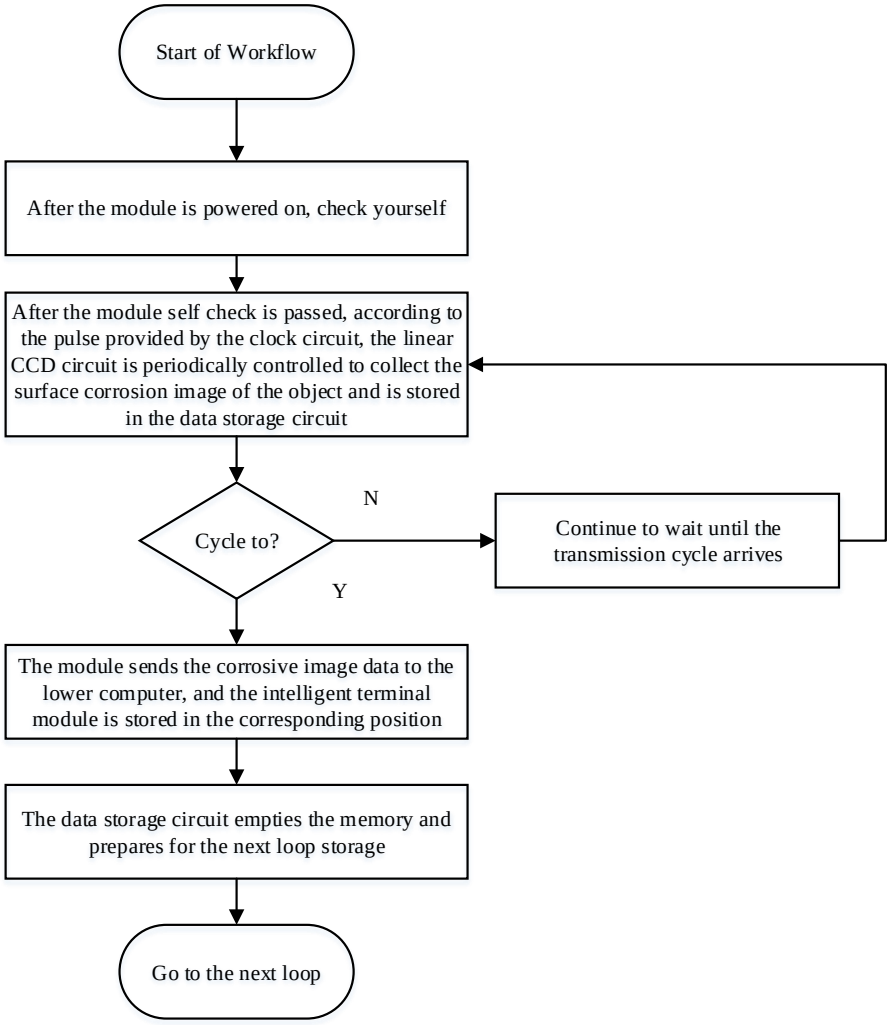

Fig. 6 Schematic diagram of working flow diagram of remote state monitoring module

6. Design of Intelligent Terminal Module of Lower Computer

Computer intelligent terminal module includes a core control circuit, key circuit, low power supply circuit, display circuit, A/D conversion circuit, sensor circuit, data storage circuit of sensor clusters, can complete the atmospheric monitoring data acquisition, preprocessing, temporary storage and other functions, with the remote monitoring module can realize atmospheric corrosion the image data acquisition, preprocessing, temporary storage, reach the system settings of the cycle, can send the sensor data, clusters of atmospheric corrosion image data to multi-point dynamic network module, and then uploaded to the host computer module[8]. Among them, the STM32F103RBT6 minimum system board core control circuit adopts STMicroelectronics, mainly used to control the multi sensor data transmission and storage priority, the atmospheric corrosion data transmission and storage, is the core of lower computer intelligent terminal control module; the key circuit adopts the matrix keyboard, you can enter data transmission period, multi sensor data processing the priority parameter information; low power supply circuit can ensure the computer intelligent terminal module long time free maintenance work; display circuit with 12864 LCD display, can display some interactive information, such as the system time, data transmission period, current data processing information; A/D conversion circuit is used to convert analog data collected by the sensor for for the convenience of digital data, the core control circuit; multi sensor electric cluster The road including PM2.5 multifunctional sensor, gas sensor, temperature sensor, humidity sensor, pressure sensor, acquisition parameters can be associated with atmospheric monitoring; sensor data storage circuit is mainly used

for temporary storage of sensor data information and image information such as atmospheric corrosion resistance. The hardware circuit diagram of the intelligent terminal module of the lower computer is shown in figure 7.

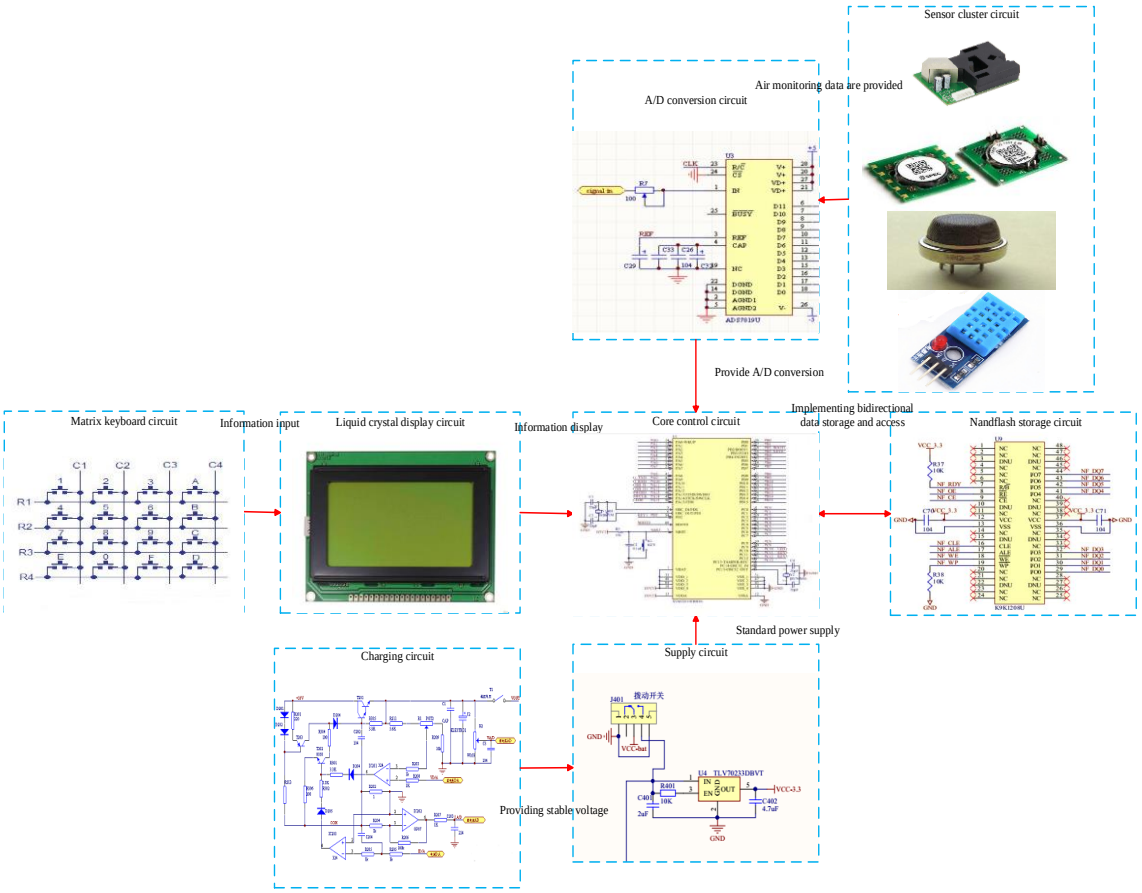

Fig. 7 Schematic diagram of hardware circuit of intelligent terminal module of lower computer

The corresponding lower machine and intelligent terminal module hardware circuit diagram, as shown in Figure 8, the lower machine intelligent terminal module works as follows: S1: start power module, self-test, self related information display in the display circuit; S2: set of multi sensor data transmission and preservation as well as the priority of data transmission cycle the parameters through the keyboard circuit, the display circuit after setting, real-time display; S3: the system started to work, multi sensor cluster begins to collect information and store it in the sensor data storage circuit; S4: to detect the presence of atmospheric corrosion of the image data from the remote monitoring module if the data is stored in the corresponding. Position; S5: send data to judge whether the cycle, if that is, send the data to a more dynamic network module; S6: empty memory data storage circuit go to the next loop.

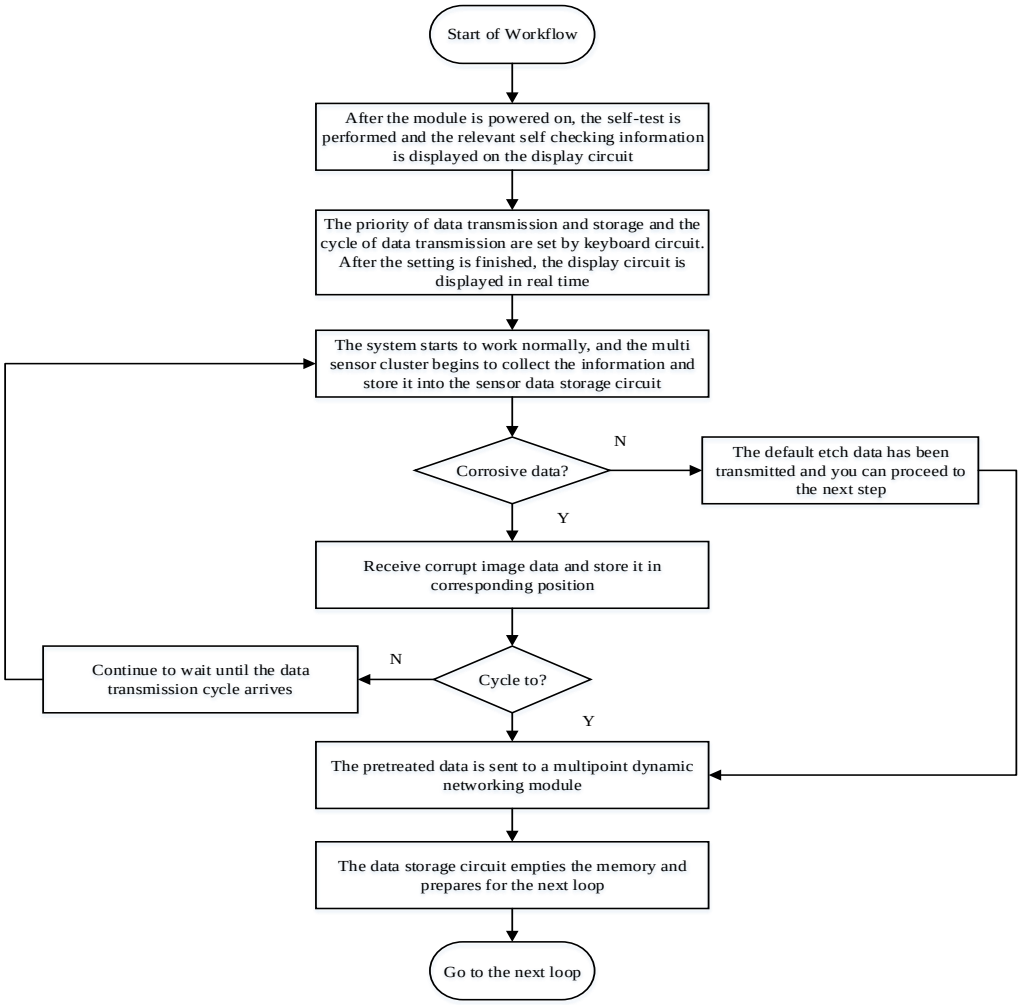

Fig. 8 Schematic diagram of working flow diagram of intelligent terminal module of lower computer

7. Conclusion

The design, from the whole function of the hardware circuit design, software process design gives the process of design and implementation of multi point dynamic network and atmospheric environment remote monitoring and intelligent corrosion monitor based on. The whole project is divided into system PC module, multi-point dynamic network module, remote monitoring module, intelligent control terminal module, for each module, the implementation of the project with the hardware circuit diagram and software flow chart are given. Overall, design of the multi-point dynamic network and atmospheric environment remote monitoring and intelligent corrosion monitor based on has the advantages of small size, high sensitivity, can be more dynamic networking and other advantages, has a great development prospect.

Acknowledgements

I would like to express my gratitude to Professor Xue Yanbing and Sun Kezheng Engineer, and thank them for giving me perfect experimental conditions and give technical instruction.

References

[1] Yang Fengjian, Liu Jun, Mao Chenghao, etc. Design of multipoint dynamic temperature monitoring system based on MLX90620 [J]. Instrument technology and sensors, 2015(12):75-78.

[2] Peng Dong, Sun Yongliang, Wang Minchuan. Research on dynamic networking method for power wireless emergency communication network [J]. Power grid and clean energy, 2017(2):83-87.
[3] Wang Shujuan, Li Weiping. Mobile communication vehicle, dynamic networking, anti-jamming performance evaluation, simulation [J]. Application of electronic technology, 2017, 43 (6):102-105.
[4] Fang Kun, ru le, in Yu Yunlong, etc. Cross layer method for reliable data transmission in low altitude multi UAV ad hoc networks [J]. Computer Engineering, 2017, 43(03):140-146.
[5] Wu Chao, Fu Dongmei, Li Xiaogang. Refinement of atmospheric corrosion grade based on data analysis [J]. Equipment environmental engineering, 2015(04):16-21.
[6] Wu Botao, Meng Xiaojing, Kong Jinping. Design and implementation of environment monitoring system based on open source hardware [J]. Electronic design engineering, 2017, 25(14):167-171.
[7] Liu Boping, Qiu Feng, Wang Lei, etc. Design and implementation of sensor based monitoring system for agricultural planting environment [J]. Computers and modernization, 2016 (07):103-106.
[8] Han Qi. Design and implementation of integrated monitoring system for computer room environment based on Internet of things [J]. Measurement and control technology, 2016, 35(7):107-111.