A Study on Design and Realization of Smart Home Based on the Internet of Things

Yuting Cai [a,*], Mingxin Tang, Guangsong Yuan

Institute of Electrical and Information, DaLian JiaoTong University, Dalian 116028, China

[a] Corresponding Email: 18742080179@163.com

Abstract

With the constant improvement of China's economic development level, the Internet of things developed from network technique and information technology has gradually become an emerging technology and widely applied in home furnishing. This paper gives an analysis of the deficiencies in smart home design by the Internet of things and brings forward design of the smart home system based on the Internet of things.

Keywords

Internet of things; Smart home design; System Realization.

1. Introduction

Residence is the platform of smart home, which makes full use of auto control technology and comprehensive wiring technology to enable interconnection of the residential facilities, thereby create a smart residential facility management system to provide people with a more environmentally friendly and comfortable living environment. Different intelligent housing systems can obtain various kinds of information by the server, including property service, municipal service for the community and so on. For example, Zigbee wireless network enables control and collection information of home devices and realizes management and control of energy consumption of those devices. A specific analysis of design of smart home system based on the Internet of things is given in the following.

2. Architecture of the Smart Home System

From top to bottom, the Internet of things can be divided into 5 layers, namely: perceptual control layer, access later, internet layer, service management layer and the application layer. See Fig. 1 for more details.

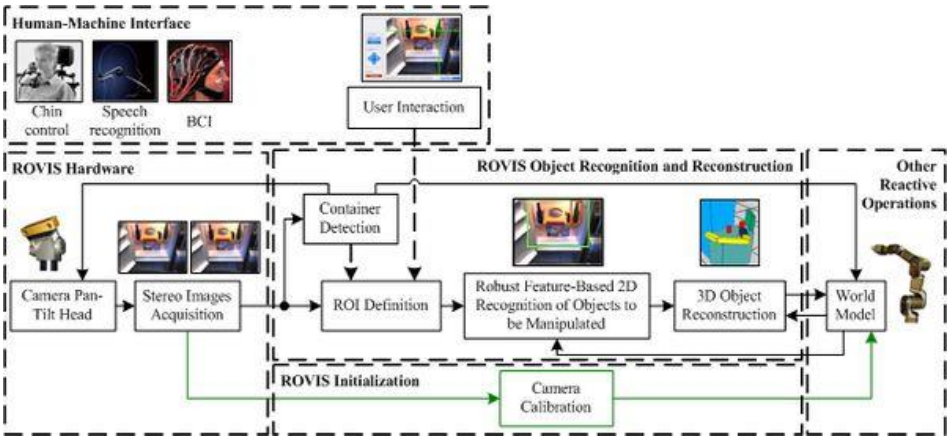

Fig.1 Physical Structure Diagram of Smart Home Based on the Internet of Things

2.1 Perceptual Control Layer

The main function of this layer lies in "perception" of the environment parameter and working parameter of electrical appliances and adjustment of the working conditions of those facilities. The appliances under control include: intelligent switch, environment perceptron and intelligent outlet, intelligent infrared remote control, and smart electric meter and heat meter as well, which can control the heating valve, gas detector, and smoke detector and alarm device. As shown in Fig. 1, there are a lot of control systems for the electrical appliances in the room, which constitute a complete home perceptual control layer with all of the above devices. Different devices can be installed on request of users [1].

2.2 Access Layer

This layer is mainly aimed at accessing the various terminals in the perceptual control layer into the Internet with the gateway of the Internet of things as the main device. Terminal communication between the perceptual control layer and other interfaces can is realized by application of Zigbee, with which, data can be sent to the server and service control command can be transmitted to the terminals [2].

2.3 Internet Layer

The main function of this layer lies in connection of the gateway with the Internet of things into the local area network of the community, and then access to the Internet or computer network communication equipment of the network operator. The router or interchanger and other network equipment can be used by accessing to the Internet but access to computer network communication equipment of the operator enables use of ADSL modulator-demodulator, wireless router and fiber router etc.

2.4 Service Management Layer

Web database server and server are the main devices used in the service management layer. This layer mainly targets at regular communication of different gateways of the Internet of things, and data acquisition of equipment in the control layer by the gateways, then data storage into the database server, and finally data release in the Internet via Web to help users to check and browse.

2.5 Application Layer

The devices used in this layer include portable computer, tablet computer, desktop and smart cellphones. This layer mainly provides users with man-machine interface for distant interaction with the system via Web browser or client software. The browser is used for monitoring the operation status of the equipment in the residence for dynamic webpage generation technology is used in Web server. Therefore, there is no need to install other utility software other than a browser in the computer [3].

3. System Realization

3.1 Internet Gateway

In the entire smart home system, the gate of the Internet of things plays as a connecting link between the terminal equipment and the server. Communication with terminal equipment provided with Zigbee interfaces or serial ports is realized for acquisition of the data which is transmitted into the server via the Ethernet or wireless network. AT91SAM7X256 processor and an external AT86RF230 as the wireless communication chip in the interface are applied for all kinds of products. Fig. 2 in the following gives a detailed description of the gateway interface circuit diagram.

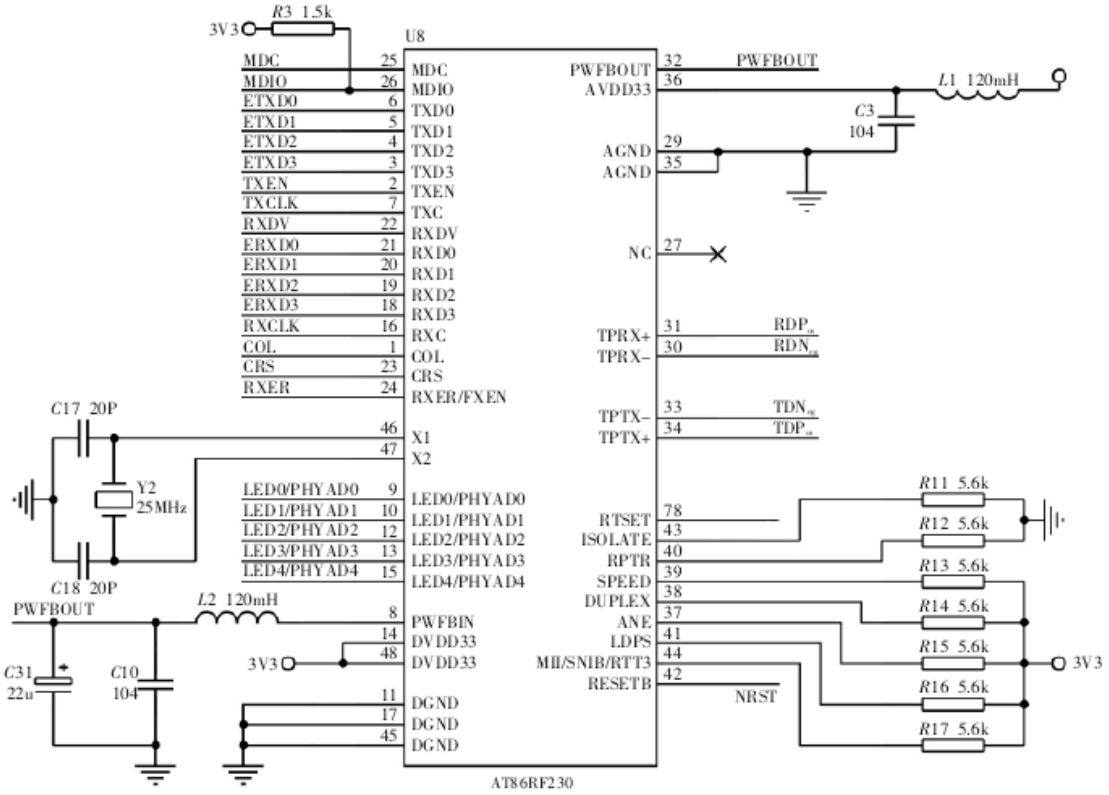

Fig. 2 Schematic Circuit Diagram of the Ethernet Interfaces

Since the gateway of the Internet of things have a lot of tasks to accomplish, an embedded operating system, namely uC/OS-II software platform is applied in order to avoid interference among all tasks. After application of the platform, program design will be easier and simpler. The application programs are divided by the function of the gateway and the tasks are provided with a simple design, as shown in Table 1.

Table 1. Main Tasks of Gateway of the Internet of Things

No.	Name of Task	Abbreviated Name	Priority	Task Description
1	Ethernet communication task	EthComm	5	Realization of communication with home router via the Ethernet
2	WLAN communication task	WifiComm	4	Realization of communication with home router via the Wi-Fi
3	Zigbee communication task	ZbComm	6	Realization of communication with all modules with Zigbee interfaces
4	Serial communication task	RSComm	8	Realization of communication with electrical appliances with serial ports

3.2 Application Graph Realization of Video Processing in the Smart Home System

JPEG standard along with a lot of algorithms including MPEG-2 and MPEG-4 are applied in video processing for the system for the requirement for internal storage of JPEG algorithm is much lower than other video processing algorithms. The processor used is AMR9 that is suitable for algorithm processing in normal operating range and gives greatly different display effects with other motion graphics. For all that, it is the optimal configuration option for the algorithm of the system[4]. In addition, DCT is applied in JPEG mage compression algorithm, which can compress images with complex target images and provide an compression ratio ranging from 25:2 to 20:2.

During block processing, the key link in compression of video frame data lies in quantization and a reasonable design of the quantizer for better processing in view of the affects caused to the image quality. This is an important means of video processing and the key to improve video effects. Besides, the compression efficiency shall be improved under the premise of good image quality. JPEG is highly sensitive to the frequency component with high frequency and low component because of its utilization of the space visual characteristics of human eyes. On this ground, high-frequency component is better provided with greater quantized interval. Different quantization parameters are employed in luminance component and chrominance component of images in that human eyes are much more sensitive to luminance signals. The classic luminance quantization table in as shown in Table 2.

Table 2. Luminance Quantization

16	10	15	20	50
11	13	12	20	55
13	16	14	57	60
19	22	36	85	65
27	55	65	45	56
25	89	56	89	52

4. System Application and Testing

After completion of system development, it can be put into use in the house. Each house is provided with a gateway of the Internet of things and a certain number of intelligent outlets and switches as per user demand and house type. If the user cares a lot about the power consumption of electrical appliances, an intelligent outlet with the function of electric power measurement can be installed for monitoring of the power consumption at any time. In addition, electrical appliances provided with infrared remote control can be furnished together with the intelligent infrared remote control. If a Web server is to be used, the rack-mounted Web server can be installed[5], with which the user can look over environmental parameter of the room by click the environment module icon in the image, change working parameters of the appliances by clicking the yellow switch value equipment icon or using the pull-down list. In this way, the operation of electrical appliances are under a better monitoring by the Internet.

Fig. 3 Daily Power Consumption Report of a Certain House Reflected by the Browser

5. Conclusion

This paper mainly probes into a smart home system based on the Internet of things with a thorough introduction of the overall architecture of the system, gives an introduction and analysis of the implementation methods of several important hardware devices and server, and finally provides a functional verification of the system in its specific application. Compared with other smart home systems, this system enables access of the whole home system to the Internet and realizes better interaction and information sharing between the house and the community.

References

[1] Li M, Lin H J. Design and Implementation of Smart Home Control Systems Based on Wireless Sensor Networks and Power Line Communications [J]. IEEE Transactions on Industrial Electronics, 2015, 62(7):4430-4442.

[2] Cicirelli F, Fortino G, Giordano A, et al. On the Design of Smart Homes: A Framework for Activity Recognition in Home Environment [J]. Journal of Medical Systems, 2016, 40(9):1-17.

[3] Khan M, Din S, Jabbar S, et al. Context-aware low power intelligent SmartHome based on the Internet of things [J]. Computers & Electrical Engineering, 2016, 52(C):208-222.

[4] Ejaz W, Naeem M, Shahid A, et al. Efficient Energy Management for the Internet of Things in Smart Cities[J]. IEEE Communications Magazine, 2017, 55(1):84-91.

[5] Stojkoska B L R, Trivodaliev K V. A review of Internet of Things for smart home: Challenges and solutions [J]. Journal of Cleaner Production, 2017, 140:1454-1464.