The strength adaptability analysis of super-large mining height hydraulic support

Shuai Kong [1, a], Lingzan Kong [1, b], Lulu Wang [2, c]

[1]School of Shandong University of Science and Technology, Qingdao 266000, Shandong, China;

[2]School of Qingdao University of Science and Technology, Qingdao 266000, Shandong, China.

[a]ks91919@163.com, [b]517457223@qq.com, [c]980778304@qq.com.

Abstract

In order to master the strength adaptability of super-large mining height hydraulic support, the paper presents a study of super-large height hydraulic support which is used in Jinjitan Colliery, China. The numerical model is established with 3D modeling software Pro/ Engineer and then analyzed by finite element analysis software ANSYS Workbench. Considering that working conditions of the support underground are rather complicated, this paper takes three groups of combinations of limiting conditions as the failure criterion of the support. Numerical simulation and inner-loading method is used to simulate the strength adaptability of the support underground. A novel method is used to study the hydraulic support in this paper, which is of great help in the selection of the hydraulic support, and it has the universal applicability. The results demonstrate the variation law of stress and displacement of the super-large mining height hydraulic support under load. The analysis results show that the support meets the strength requirements of the working face. The displacement shows a trend of decreasing firstly, and then increasing from the top of the hydraulic support to its bottom. The analysis results of this paper have great significance for optimum design and distribution of the basic material of super-large mining height hydraulic support.

Keywords

Hydraulic support, super-large mining height, finite element analysis, inner loading.

1. Introduction

Coal represents the main energy source in the whole world. How to safely and efficiently exploit coal is a key issue [1-2]. The hydraulic support is one of the most indispensable equipment in achieving the comprehensive mechanization and automation of coal mining so the design of high-performance and reliable hydraulic support is important to improve mechanization degree of coal mining [3-4]. Hydraulic support plays an important role in the underground coal mine safety production [5]. As the principal equipment of surrounding rock support of coal mining, hydraulic support can prevent roof caving and maintain a safe working space through support the stope roof. Therefore, the strength adaptability of the hydraulic support is one of the key factors to determine whether safe and efficient coal mining of the working face can be achieved [6]. In recent years, large mining height fully mechanized coal mining has gradually became the main developing direction of a thick coal seam fully mechanized coal mining in the world. Now, lots of countries in the world are increasing investment on hydraulic support design, manufacture and research [7]. As the fundamental equipment of thick coal seam fully mechanized coal mining, super-large mining height hydraulic support usually works under harsh conditions and its stress situation is very complicated. How to properly simulate

the actual stress of underground support space as well as the strength calculation of the entire frame and the structure are the precondition for reasonable design the hydraulic support. Due to the large thickness of coal mining, with the super-large mining height working face advancing, the large cross-down spaces of the overburden cycle fracture produces a more intense dynamic loads so that the strength analysis is necessary for super-large mining height hydraulic support [8]. According to the latest national standards promulgated in 2011 "GB25974.1-2010 coal mine hydraulic support Part 1: General technical conditions"[9], this paper is based on the super-large mining height hydraulic support for the finite element analysis of the whole frame, the stress and displacement parameters change rule of the support are further grasped on this basis. It has important significance and economic interests for super-large mining height hydraulic support to optimize the design and distribute the base metal.

2. Establish analytical model

2.1 Establishment and simplification of 3D model of support

According to the geological conditions of a certain mine, the type of hydraulic support was determined to be the shield. Current design and calculation of hydraulic support was usually carried out based on empirical design and experimental investigation [10]. Size and structure of the hydraulic support were designed according to the following aspects: The first step was determining the parameters of the hydraulic support. The height of the support was determined based on factors such as the thickness of the coal seam and mining area within the range of geological conditions. The maximum and the minimum height of the support were used to determine the stretching ratio. The length of the base was determined by the small contact pressure, sufficient space and the stability of the support. The second step was the design of four-bar linkage. Four-bar linkage is the crux of the support design and it is also the key of the hydraulic support design [11-12]. Therefore, according to the mathematical relationship among the parameters, using Visual Basic software to optimize the design of four-bar linkage to obtain a set of optimal solutions obtains the length of front bar, rear bar, gob shield and each hinge points. The third step was to determine the canopy parameters. Taking into account relevant factors to calculate the length of the canopy effects such as working way of support and matching size, according to the formula, the canopy's length was determined. The fourth step was to determine the leg and equilibrium jack's position. Under the premise of considering the influence factors, it can be solved according to the relevant calculation formula [13]. The highest and lowest positions of two-dimensional hydraulic support were shown in Fig.1. Then, the two-dimensional size expands to three-dimensional model based on experience.

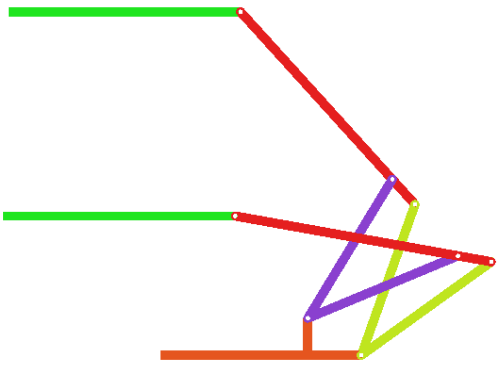

Fig. 1 Highest and lowest positions of hydraulic support

This paper takes the super-large mining height hydraulic support as the research object. The maximum working resistance is 21000KN. The super-large mining height hydraulic support model shown in Fig.2 was established in Pro/Engineer. As a multi-plate whole welding parts, because of hydraulic support's bad structural regularity, it was necessary to simplify the structure under the condition that the stress distribution of the dangerous section of the support was not affected when the support was analyzed. In this paper, simplified principles were as follows:

(1) Support is composed of welding parts, whose welding performance is an important factor affecting the properties of the support. This paper was based on the discussion about the main analysis of statics stress and displacement characteristics, therefore the welding was equivalent as the base metal, namely ignoring the influence of welding factors on the strength of the support;

(2) Simplifying the main support structure, without affecting the basic features and working conditions force of parts, and some may be omitted, such as small machining chamfering, rounded corners and small holes. Deleting small support performance of rings, hydraulic pipe pressure ring and other small features. The non-main bearing parts such as face sprag institutions, the side guard plate and telescoping beam, can be omitted. The leg can be substituted according to equivalent mechanical principles, etc.

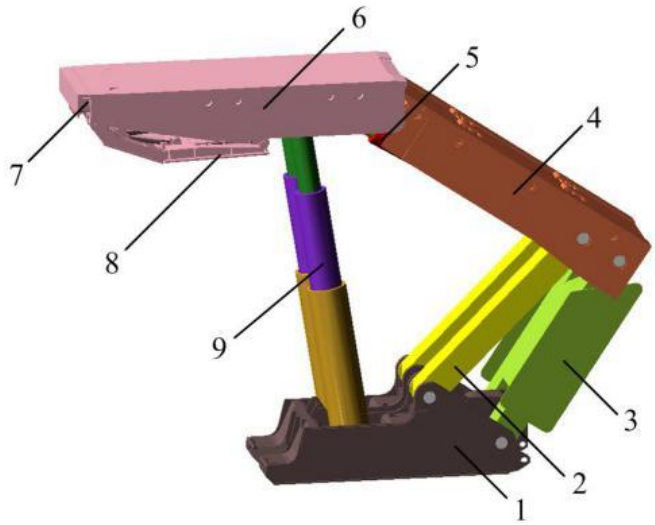

1-the base; 2-the front bar; 3-the rear bar; 4-the gob shield; 5-the equilibrium jack; 6-the canopy; 7-the telescopic beam; 8-the tertiary face sprag plate; 9-the leg

Fig.2 The geometric model

2.2 The properties of materials

Although the steel used throughout the design of hydraulic support is not uniform, but the density, elastic modulus and Poisson's ratio of various steel have little difference. In order to facilitate the analysis of the whole support, so the same material properties were used in the analysis. Because there is a big difference between the yield condition, we set up several different yield conditions. The properties of the material are shown in Table 1.

Table.1 The properties of the materials

Materials	Elastic modulus/GPa	Poisson's ratio	Density/kg·m^{-3}	Yield strength/MPa
Q550	210	0.3	7850	550
Q690	210	0.3	7850	690
Q890	210	0.3	7850	890

2.3 Deal with contact problems

Each main component of hydraulic support was hinged together through an axis pin, and there is a certain of assembly gap. The contact between the axis pin and the pin hole in the actual working conditions under the mine is more complicated. It is difficult to determine a precise contact boundary under certain loading conditions. At present, there are three main methods to deal with the problem of the axis pin, which are constraint equation method, bonding method and contact method. Studies show that using the contact method can achieve better calculation results [14]. Therefore in this paper, the treatment of pin hole used a contact method, namely the connection with the axis pin use friction connection and the friction coefficient was 0.15. No-friction connection was adopted between the various components of the hydraulic support.

2.4 Meshing

The smaller size of mesh is divided, the more accurate results will be gotten. But due to the large volume of support, it has little significance to make the mesh too small. After a series of comparative experiments, this paper selected the tetrahedron unit meshes. The unit size was 50mm, and hydraulic support was divided into the total of 316534 units. Different meshed methods have different requirements for solid model. The mapped meshing and swept meshing have special requirements for solid model and the free meshing has no special requirements for solid model. Due to the complex 3D model of hydraulic support, the free meshing method can make the calculation more convenient, and the other two meshing methods will increase the workload of meshing. So this paper uses the free meshing. The finite element model after the free meshing was shown in Fig. 3. As we can see in Fig. 3, the mesh is relatively uniform, which can satisfy the requirement of the whole frame of finite element analysis and calculation.

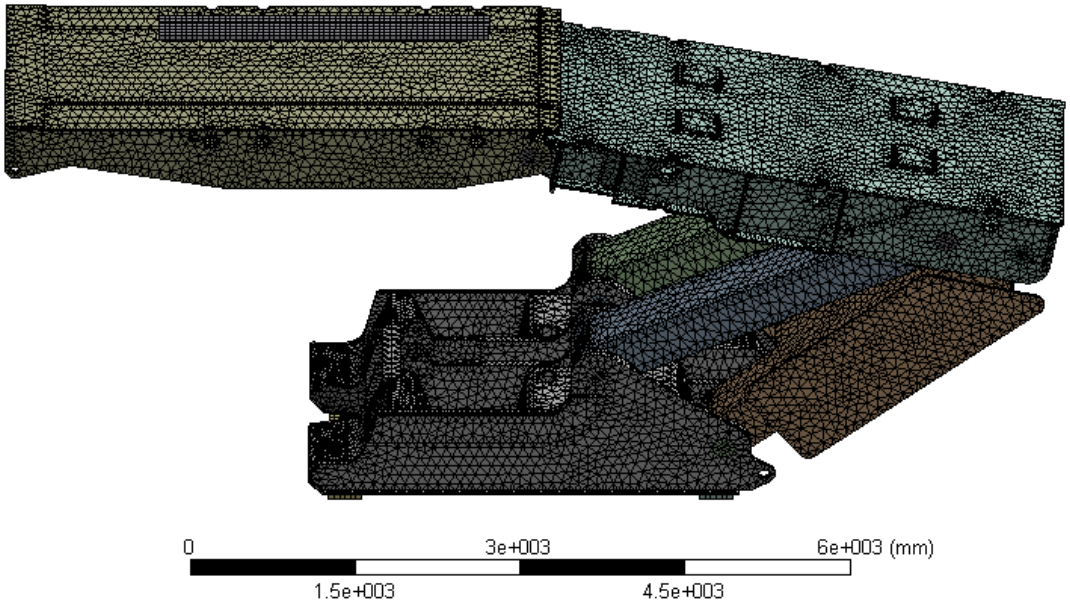

Fig.3 The finite element model

2.5 The boundary condition and load cases

Studies show that the combination loading was more conform to the actual working conditions of the support [15], so the combined loading methods were analysed in this paper. There are three kinds of connection of the most dangerous working conditions: canopy torsion loading and both ends of the base loading, canopy eccentric loading and both ends of the base loading, canopy eccentric loading and base torsion loading[16].

By national standards, the hydraulic support strength was tested by placing different combinations of heel block to simulate the working conditions of hydraulic support underground. If the inner loading is used, force heel block cannot be taken as an external load to consider but as boundary conditions to be dealt with in the calculation. Namely the real contact is used in the contact surface of the heel block and the canopy, the base, the surface of the heel block uses fixed constraint. Due to spherical contact between column nest and leg, handling of spherical load, is relatively complex. According to the Saint Venant's principle, the spherical contact load was simplified equivalently. The force was added to the sphere of column nest directly. The vertical angle of the force action line along the leg was φ. According to "GB25974.1-2010 coal mine hydraulic support Part 1: General technical conditions", the hydraulic support load size and boundary conditions are shown in Table 2.

Table.2 The hydraulic support's load size and boundary conditions

Condition's type	Load diagram	The height of support analysis/m	Force of a single leg /KN	Angle of inclination of leg φ/°
canopy torsion loading and both ends of the base loading	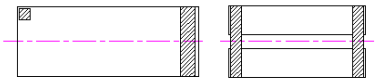	6.5	12600	9
canopy eccentric loading and both ends of the base loading	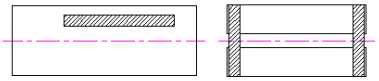	4.1	12600	14
canopy eccentric loading and base torsion loading	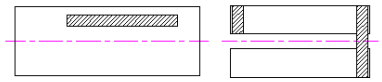	4.1	12600	14

3. Results and analysis

The Mises yield condition is used as the strength failure criterion of the hydraulic support. If the Mises stress exceeds the yield stress of the material, the support material yield unsuccessfully.

3.1 The result of canopy torsion loading and both ends of the base loading

Under the condition of the canopy torsion loading and both ends of the base loading, the stress distribution and the displacement distribution of the whole frame was shown in Fig. 4.

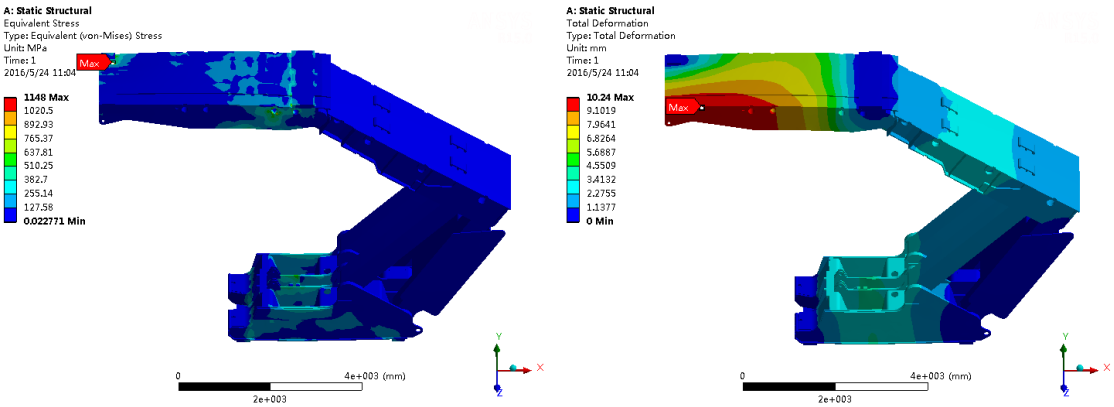

(a) stress diagram (b) displacement diagram

Fig.4 The stress and displacement distribution of canopy torsion loading and both ends of the base loading condition

As seen from Fig. 4 (a), in this condition, the canopy and the base have maximum stress, the stress of gob shield, front bar and rear bar are small and evenly distributed. The maximum stress is 1148MPa, which occurs in the stress concentration area between end of the canopy and the heel block. But the high stress area doesn't exist in actual conditions, and its impact on the stress distribution of the rest of the support's canopy is also small, so we can ignore the localized high stress area [17]. Structural stress concentration is the main factors to influence the fatigue life of hydraulic support. As seen from Fig. 4 (b), in this condition, the displacement of the canopy and the base is the largest, the maximum displacement is 10.24mm, located on the outer reinforcement which far away from one side of heel block. The color faded from the maximum displacement side to the heel block, which represents the displacement decreases. The maximum displacement of the base located in the column nest and gradually reduced toward two ends. The displacement change of front bar and rear bar is relatively small.

3.2 The result of canopy eccentric loading and both ends of the base loading

Under the condition of the canopy eccentric loading and both ends of the base loading, the stress distribution and the displacement distribution of the whole frame was shown in Fig. 5.

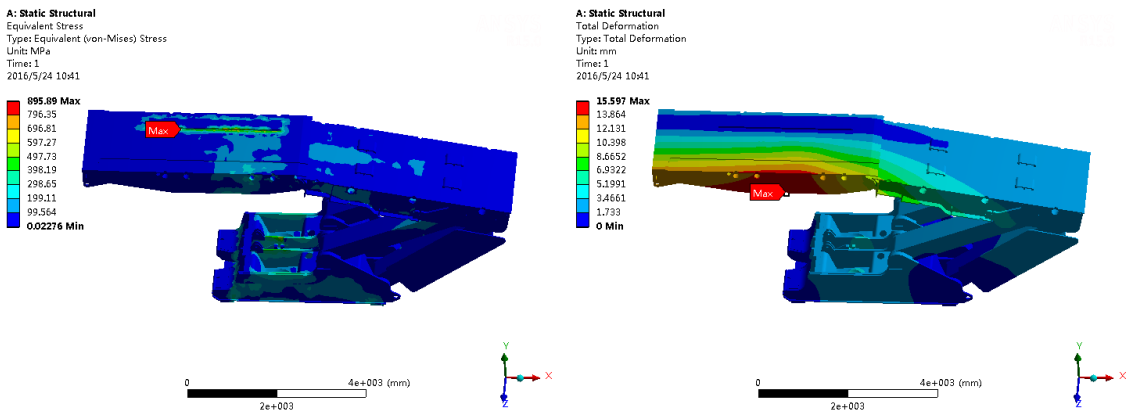

(a) stress diagram (b) displacement diagram

Fig.5 The stress and displacement distribution of canopy eccentric loading and both ends of the base loading condition

As seen from Fig. 5 (a), in this condition, the maximum stress is 895.89MPa, which occurs in the stress concentration area between the canopy and the heel block. In addition to the stress around the heel block is large, large stress that is about 600 MPa also located in the column nest. The maximum stress of the base is located in the middle of the two main reinforcement near the column nest, which is about 650 MPa. Other area stress is about 300 MPa. The Q690 and Q890 materials can meet the strength requirements. As for the four-bar linkage, the stress of left front bar is bigger than the right one. As seen from Fig.5 (b), in this condition, the maximum displacement is 15.597mm, located in the outside the main reinforcement where is near the column nest and far away from the heel block. As the color becomes shallow gradually from here to heel block, the displacement is reduced in sequence. Overall, except for the canopy, the distribution of displacement is relatively symmetrical.

3.3 The result of canopy eccentric loading and base torsion loading

Under the condition of the canopy eccentric loading and base torsion loading, the stress distribution and the displacement distribution of the whole frame was shown in Fig. 6.

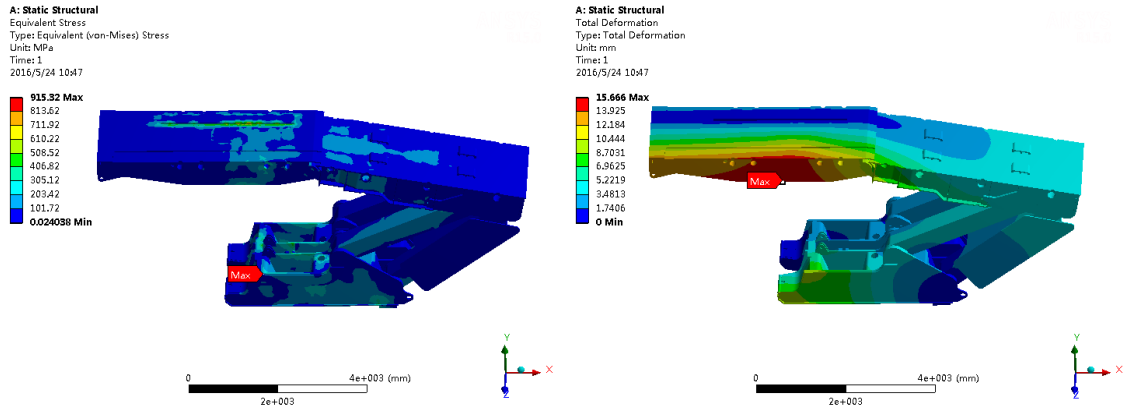

(a) stress diagram (b) displacement diagram

Fig.6 The stress and displacement distribution of canopy eccentric loading and base torsion loading condition

As seen from Fig. 6 (a), in this condition, the maximum stress is 915.32MPa, which occurs in the stress concentration area between heel block and the base, but the high stress area doesn't exist in actual conditions, so we can ignore the local high stress areas. The stress of the base under the bridge contact area is relatively large, it's about 750 MPa. But the Q890 materials can meet the strength requirements. As seen from Fig. 6 (b), in this condition, the maximum displacement is 15.666mm and the maximum displacement is located outside the main reinforcement where is near the column nest and far away from the heel block. The overall displacement change is consistent with the trend of Fig. 5 (b). The difference is the displacement change of base point is asymmetric because the

displacement that away from the heel block side is larger than where is contact with the heel block side. In general, the displacement variation on the left side of the base is larger than the right side.

3.4 The variation law of displacement and stress

In order to further grasp the stress and displacement distribution law of the hydraulic support, the results of the previous analysis are discussed. Under the above 3 conditions, the maximum displacement and maximum stress change curve of each component are obtained. As seen from Fig. 7, the maximum displacement along the canopy - gob shield - equilibrium jack - four-bar linkage decreases in turn and the displacement increases slightly at the base. In the canopy eccentric loading and base torsion loading condition, the maximum displacement of each component is the largest. Therefore, in these three conditions, the canopy eccentric loading and base torsion loading condition is the worst working conditions. As seen from Fig. 8, maximum stresses along the canopy - gob shield - equilibrium jack - four-bar linkage - the base, shows a trend of falling and then rising, and the shape variation shows the changing rule of the “V”.

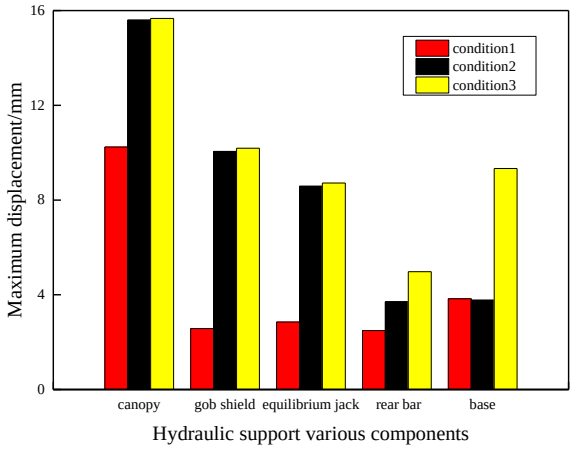

Fig.7 The maximum displacement histogram

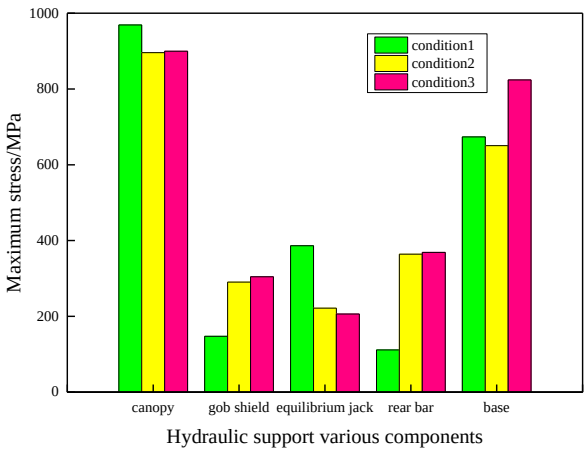

Condition 1-canopy torsion loading and both ends of the base loading
Condition 2-canopy eccentric loading and both ends of the base loading
Condition 3-canopy eccentric loading and base torsion loading
Fig.8 The maximum stress histogram

According to the analysis above, the displacement and stress variation rule were obtained so the distribution size of the displacement and stress of hydraulic support’s various components were obtained. The high strength steel plate or the reinforcing rib can be used in the position of the big

deformation and the common steel plate is used in the position where the deformation is small so the material can be used more effectively under the condition of meeting the requirement of strength. Using the materials effectively to select different strength materials in different parts will not only ensure the safety of the support at work and avoid the waste of materials but also improve the reliability and the service life of the support, which will eventually improve the economic efficiency of enterprises.

4. Conclusion

Through finite element analysis of hydraulic support, we can draw the following conclusions:

For the first time this paper analyzed the static load strength adaptability of the 8.2m super-large mining hydraulic support by ANSYS workbench in the world. The results show that the strength of the support meets the working load conditions.

Through the probe which comes with Workbench ANSYS software, this paper created a new type of hydraulic support research method that I call the "four line" method, which is along the canopy-gob shield-rear bar-base this line. The obtained curve can clearly draw the deformation of any position of the hydraulic support. With the rise and fall of the curve, a series of different high strength steel plate can be used. In addition, this method is suitable for the analysis of thin coal seam and medium thick coal seam hydraulic support.

This paper not only analyzes the support frame from the whole, but also analyzes the maximum stress and maximum deformation of the components. The overall and local analysis method has a very good guiding significance for the design and analysis of super-large mining height hydraulic support.

References

[1] Wang J.J., Jia X.L., Fan X. The strength finite element analysis of whole caving hydraulic support. Coal Mine Mach. 3:36-38, 2005.

[2] C. González-Nicieza, A. Menéndez-Díaz, A.E. Álvarez-Vigil, M.I. Álvarez-Fernández. Analysis of support by hydraulic props in a longwall working. International Journal of Coal Geology. 74:67-92, 2008.

[3] Xiaohui Zhao, Fuyong Li, Yu Liu, Yanjun Fa. Fatigue Behavior of a Box-Type Welded Structure of Hydraulic Support Used in Coal Mine. Materials. 8:6609-6622, 2015.

[4] DG Hu, X Fan. Analysis of the Strength and Reliability of Hydraulic Support with Finite Element Method. Advanced Materials Research. 619:225-230, 2012.

[5] B Wang, Z Guan, M Cha. Research on the Control System of Hydraulic Support Based on CAN Bus. Energy Procedia. 11:1923-1928, 2011.

[6] YY Ma, LY Xie, XF Qin. Strength and Reliability Analysis of Hydraulic Support. Advanced Materials Research. 544:18-23, 2012.

[7] H Liu, J Liu. Hydraulic Support Entire Strength Research Under Four Kinds of Typical Load Working Conditions. Second International Conference on Mechanic Automation & Control Engineering. 2011.

[8] SW Cui, YL Zhang. Strength Analysis of High Strength Steel Hydraulic Support. Applied Mechanics & Materials. 184-185:676-679, 2012.

[9] People's Republic of China coal industry standard GB25974.1-2010.. "Mine hydraulic support Part 1: General technical conditions" [S] Administration of Quality Supervision, Inspection and Quarantine of People's Republic of China, Standardization Administration of China, 2011(in China).

[10] Xuewen Wang, Zhaojian Yang, Jiling Feng, Hunju Liu. Stress analysis and stability analysis on doubly-telescopic prop of hydraulic support. Engineering Failure Analysis. 32:274-282, 2013.

[11] M. Oblak, B. Harl and B. Butinar. Optimal design of hydraulic support. Struct Multidisc Optim. 20:76-82, 2000.

[12] W Nie, W Cheng, L Zhang, S Zhao. H Wang. Optimization Research of Hydraulic Support in Fully Mechanized Caving Face. Procedia Engineering. 84(6):770-778, 2014.
[13] Lu Zhongliang, Jing Guoxun, Xiao Yaning. Safety analysis of the design and use of hydraulic support [M] Beijing: Coal Industry Press, 2006(in China).
[14] Liu Xinhua. Structural analysis of hydraulic support with large mining height [D] Beijing: Coal Science General Institute,2008(in China).
[15] Wang Xiaodong. The influence of loading ways on the test results of the type of hydraulic support [J]. Coal Science and Technology. 34(2):27-31, 2006(in China).
[16] HW Liu, GB Pu, YH Du, P Zhang. Finite Element Analysis of Static Strength and Fatigue Strength of Hydraulic Shield Support. Advanced Materials Research. 332-334:2161-2165, 2011.
[17] Wang Guofa. Advanced powered support and manufacture technology [M] Beijing: Coal Industry Press,2010(in China).