The Design of Reversing Radar

Chao Tang

Electronics and Information Engineering, Changchun University of science and technology, Jilin Changchun 130022, China

Abstract

with the development of social economy and the continuous prosperity of the transportation industry, the number of cars is increasing. Traffic congestion is becoming more and more serious, which often happens in the car crash, causing many casualties and property loss. In the face of this situation, the design of a fast response, high reliability and more economical vehicle collision warning system is very important. Ultrasonic distance measurement is one of the most common methods of distance measurement. This paper describes the use of ultrasonic distance measurement method to design a car backing collision warning radar system.

Keywords

reversing radar; ultrasonic; AT89C51; ranging sensor

1. Working principle and system design of ultrasonic distance measurement

Due to the strong directivity of ultrasonic wave, the energy consumption is slow, the distance is far away from the medium, so the ultrasonic wave is often used for distance measurement. The principle of ultrasonic distance measurement is the use of ultrasonic transmission and reception, according to the ultrasonic propagation time to calculate the spread distance. The ultrasonic transmitter in a direction to emit ultrasonic in the launch of the beginning of time at the same time, the spread of ultrasound in the air, on the way encountered obstacles to return immediately, ultrasonic receiver receives the transmitted wave immediately stop the clock[1].

Rangefinder resolution depends on the selection of ultrasonic transducer. The ultrasonic sensor is a sensor using piezoelectric effect, piezoelectric ceramic material is used. Because of ultrasonic in the air spread will have considerable attenuation, the level of the attenuation of the frequency is proportional to; and high frequency resolution is high, so the short distance measurement should choose the high frequency sensor, and long distance measurement when applying a low frequency of the sensor[2].

Based on the AT89S51 microcontroller as the core, including the MCU system, the transmitting circuit and the receiving amplifying circuit and display circuit and alarm output circuit. The system block diagram is shown in figure 1.

2. System hardware design

2.1 Single chip microcomputer system

Using single-chip AT89S51, using 12MHz high precision crystal oscillator, in order to obtain a stable clock frequency, reduce the measurement error. SCM P2.7 port output ultrasonic transducer required 40kHz square wave signal, P3.5 port to monitor the return signal output of ultrasonic wave receiving circuit. Display circuit adopts a simple and practical three common anode LED digital tube, code segment output port for SCM P2 mouth, bit code output port respectively SCM P3.4, P3.2, P3.3 port, digital tube drive using a PNP triode S9012 transistor drive[3].

After receiving the echo of the echo, the ultrasonic receiving head is processed by the receiving circuit, and a low level pulse is input to the single chip microcomputer P3.5. SCM control the ultrasonic transmission, ultrasonic transmission is completed, immediately start the internal timer T_0 timer, when detected by the high level of P3.5 into a low level, the internal timer to stop the timer. Single chip will be measured time and sound speed multiplied by 2 to get the measurement value, and finally by 3 digital tube will be measured results show that. The single chip microcomputer system is shown in figure 2.

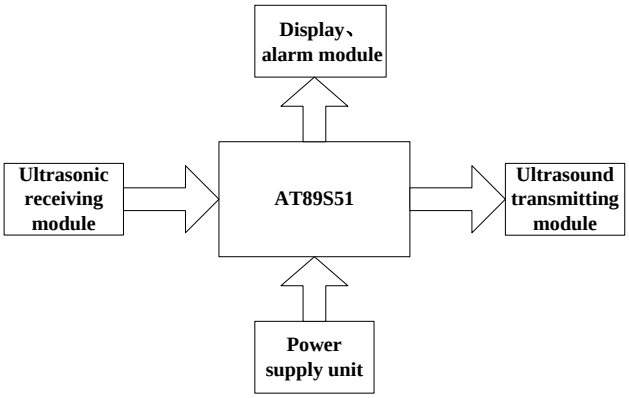

Figure 1 system design block diagram

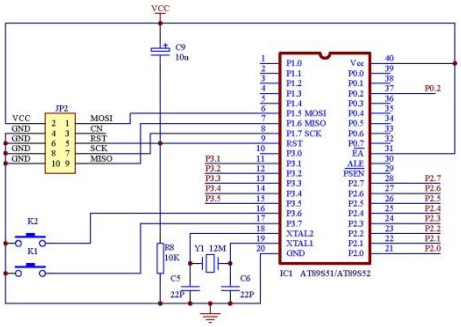

Figure 2 ultrasonic ranging singlechip system

2.2 Ultrasonic emission part

The ultrasonic emission circuit is shown in figure 3.

40KHz square wave output by the SCM AT89S51 P2.7, the BG1 drive the ultrasonic pulse transformer, pulse transformer secondary formation of 60VPP voltage and loaded to the ultrasonic wave transmitting head, driving ultrasonic emitter emit ultrasonic. When the ultrasonic wave is sent out, the echo is generated after the obstacle is encountered. Due to the sound wave propagation in the air attenuation, so the amplitude of the received waveform is low, the receiving circuit amplification, shaping, the final output of a negative jump, the input of the P3 microcontroller.

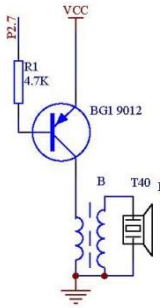

Figure 3 ultrasonic ranging sending unit

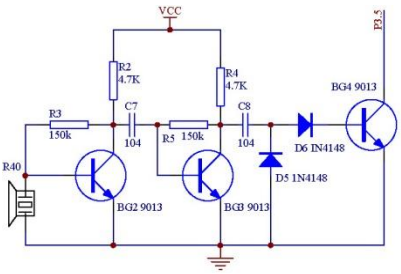

Figure 4 ultrasonic receiving unit

2.3 Ultrasonic receiving circuit

The ultrasonic receiving circuit is shown in figure 4.

Due to the reflection of the ultrasonic signal is very weak, so the receiving circuit needs to be amplified. The received signal is amplified on the two stage amplifier, which is composed of BG1 and BG2[5]. The magnification of each stage is 70 times. Amplification of the signal are demodulated signal through the detection circuit, namely a plurality of pulse wave demodulation into multiple pulse wave. Here is the use of I N 4148 detector diode, DC signal output is between two diode capacitor voltage. The receiving circuit has the advantages of simple structure, good performance and low manufacture difficulty[4].

2.4 Display unit

This system uses the Trinity LED digital tube display the measured distance value.Digital tube using dynamic scanning display, the output port for the P2 port of the microcontroller, the bit code output port are P3.4 microcontroller, P3.2, P3.3 port, digital tube driver using PNP transistor S9012 driver. The display unit circuit is shown in figure 5.

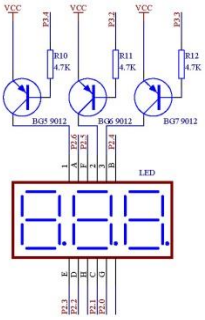

Figure 5 shows the unit circuit

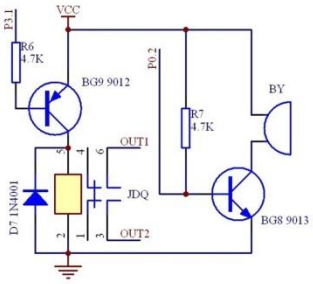

Figure 6 alarm output circuit

2.5 Alarm output circuit

Alarm signal by MCU P0.2 mouth output, sound alarm signal, circuit is composed of a resistor R7 and triode tube bg8, buzzer by composition, when the measured value is lower than the preset alarm value, the buzzer sends out drip, drip, drip. Alarm sound signal, the measured value is higher than the set alarm value, stop the alarm sound[5]. Alarm output circuit as shown in figure 6.

3. Conclusion

The reversing radar system designed in this paper is an auxiliary system to ensure the safety of the car. Through the ultrasonic probe ultrasonic reflection, the use of high speed MCU calculated measuring vehicle and obstacle between the round-trip time and then computes the turnout and the obstacle distance, and joined the software compensation, to improve the accuracy of the calculation of the distance, then displayed on the LED digital tube, when there is an obstacle in the detection range, buzzer alarm, distance is near the buzzer alarm frequency is greater, when the distance is less than the minimum safety distance buzzer uninterrupted alarm. The practical test shows that the system works stably and can meet the requirements of general close range measurement, and has low cost and good performance to price ratio.

Reference

[1]Guo Liying.Design of ultrasonic distance measuring circuit based on single chip microcomputer [J]. Automation systems and applications, 2010, (6): 100-102.

[2]Wang Junfeng, Meng Lingqi. Modern sensor technology[M]. Beijing: Mechanical Industry Press, 2009.

[3]Zheng Yuzheng. Principle and application of single chip microcomputer [M]. Chengdu: Sichuan University press, 2008.

[4]Wang Hongyun, Yao Zhimin, Wang Zhulin, Ultrasonic ranging system design [J]. Instrument technique,2010,(11): 47-49.

[5]Hua Chengying.Analog electronic technology foundation[M]. Beijing: Higher Education Press, 2006.