Design of Car Reversing System Based on Single Chip Microcomputer

Jinghui Su, Yunrong Liu and Chunling Han

School of Electronics and Information Engineering, Changchun University of Science and Technology, Changchun 130000, China

Abstract

This paper introduces a kind of based on microcontroller pulse reflecting type ultrasonic ranging measuring alarm system. This design mainly AT89S51 microcontroller core, using ultrasonic sensors for the features and advantages of the ultrasonic ranging system, combining the ultrasonic ranging system AT89S51 microcontroller, display ultrasonic ranging design method. Expounds the principle and characteristics of ultrasonic sensor, the entire circuit USES modular design, the circuit of launching ultrasonic, circuit of receiving ultrasonic, the circuit used to display and the circuit used to alarm by speaker.

Keywords

Microcontroller, Ultrasonic sensors, Ranging, Auto reversing system

1. Introduction

With the development of social economy, the number of vehicles is increasing year after year and traffic collision is correspondingly increasing, causing great life property loss and serious spiritual injury. According to the statistics, traffic accidents caused by dead zone behind the vehicles take about 30% in China. Taking this situation into consideration, it is imperative to design an economic automotive anti-collision alarm system with fast response and high reliability.

The key of auto reverse collision alarm system is to measure the distance, and ultrasonic round-trip time measurement is one of the common ranging methods. [1]When reversing, making use of ultrasonic reflection characteristics we can detect the location of obstacles which are behind the vehicle through the ultrasonic sensors. Besides, we can report the distance between vehicle and obstacles to the driver by using acousto-optic device in order to ensure safety.

2. Operating principle of ultrasonic distance measurement

2.1 Brief introduction of ultrasonic wave.

Acoustic wave higher than 20 KHz is called ultrasonic wave. It is a kind of mechanical wave generated by the mass point in medium which has periodic vibration with effects of mechanical force. Ultrasonic wave has the following features:

Ultrasonic wave has the basic rule of general acoustic wave, reflection phenomenon and refraction phenomenon, so all these characteristics can be used for measurement and positioning.

Ultrasonic wave has short wave length, strong beam directivity, concentrated energy and high resolving ability. It can distinguish very tiny deficiency or object, so it can be applied to underwater detection and crack detection.

Ultrasonic wave with large power can generate and transmit strong energy. Under the same intensity, the higher the frequency of sound wave is the larger the power will be. Due to the high ultrasonic frequency, the power of acoustic wave is higher than that of general acoustic wave.

2.2 Principle and realization of ultrasonic distance measurement.

With a round-trip time measurement method, the distance between the system and the measured object can be obtained by measuring the time taken to transmit and receive ultrasonic wave only. [2] The working principle of ultrasonic ranging is shown as Figure 1. T is the transmitting terminal of ultrasonic transducer, R is the receiving terminal of ultrasonic transducer, and d is the distance between the ultrasonic ranging system and the measured object. Suppose $t0$ is the time point of ultrasonic pulse being transmitted from T point, $t1$ is the time point of returning echo being received by R point, and v is the velocity of sound wave at the current temperature, then the distance: $d = \frac{(t_1 - t_0)v}{2}$

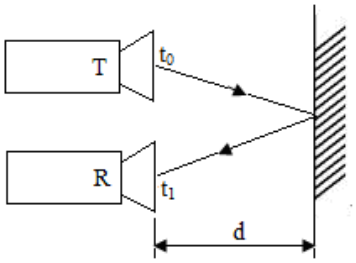

Fig. 1 The working principle of ultrasonic ranging

Due to the too low transmitting frequency of ultrasonic wave and too much external noise disturbance, too high transmitting frequency will be confronted with attenuation with descending operating distance. If the length of transmitting wave is too long, the receiving terminal will receive leaky wave; if the length of transmitting wave is too short, the transmitting transducer can not be excited or the shock excitation can not reach the maximum value. The tests indicate that using ultrasonic wave of 40 KHz to transmit transmission pulse which has 5~16 pulses will have better transmission performance. This design adopts the ultrasonic wave which transmits 8 pulses for once.

Singlechip at t_0 moment controls ultrasonic transmitter circuit to transmit 40 KHz square wave and starts the timer at the same time. At t_1 moment when back wave is received, a negative tapering will be generated at the interrupt port of singlechip. After response, the singlechip will carry out interrupt service subroutine, and the timer will stop counting in interrupt routine. Time difference t will be calculated and the distance of obstacles will be finally calculated. Under normal temperature, the propagation velocity of ultrasonic wave in air is about 340m/s, so the distance between vehicles and obstacles is shown as follows:

$$d = \frac{340 \times t}{2} = 17000t \qquad \text{(Unit: cm)} \tag{1}$$

The count initial value is set as 0. Once the counting of time overflows once, the count will add 1. Therefore, the time of ultrasonic wave from transmission to receiving is:

$$t = \frac{count \times 65536 + TH0 \times 256 + TL0}{1000000} \qquad \text{(Unit: s)} \tag{2}$$

Ultrasonic sequence diagram is shown as Figure 2.

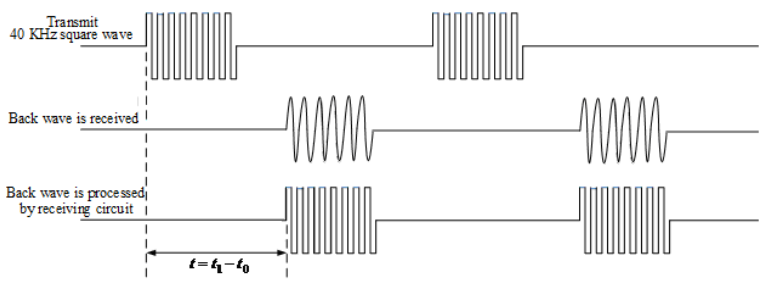

Fig. 2 Ultrasonic sequence diagram

3. Hardware design of auto reversing system

3.1 Design of ultrasonic transmission circuit.

Ultrasonic transmission circuit is shown as Figure 3.

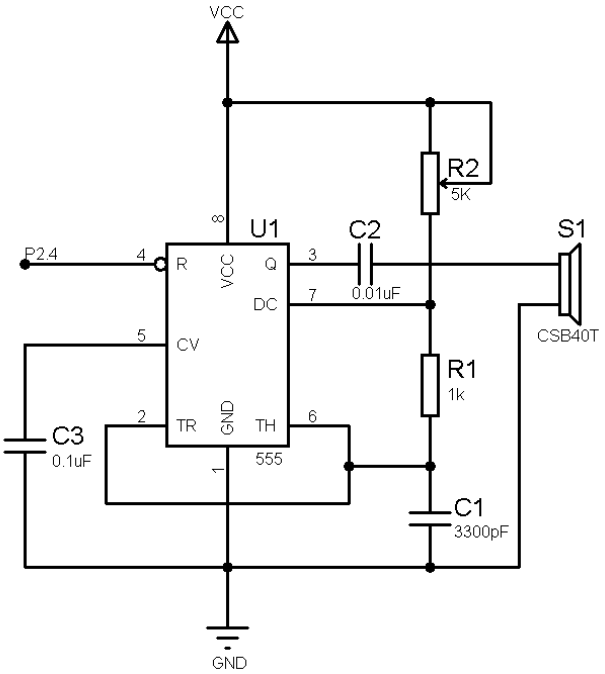

Fig. 3 Ultrasonic transmission circuit

Ultrasonic transmission circuit is a multivibrator made up of a 555 circuit. Its oscillation frequency is:

$$f \approx \frac{1.44}{(R_2 + 2R_1)C_1} \tag{3}$$

The oscillation frequency calculated by the formula (3) is 39.7 KHz~43.6 KHz. The oscillation frequency of circuit and inherent frequency of ultrasonic transducer as 40 KHz can be made unified by regulating R2 resistance value.[3] When the automobiles switch to reverse gear, singlechip P2.4 pin will transmit a reset signal to the 4 pin of 555 chip. The circuit will generate ultrasonic electric pulse signal with frequency as 40 KHz. The signal through piezoelectric-type ultrasonic transducer can be turned to mechanical wave and transmitted to fixed orientation.

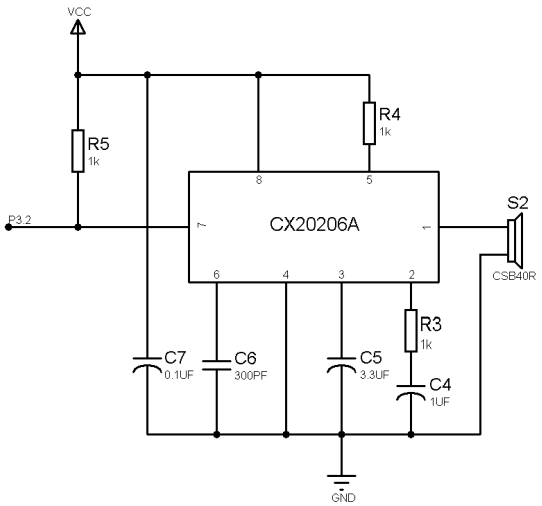

Fig. 4 Ultrasonic receiving circuit

3.2 Design of ultrasonic receiving circuit.

When ultrasonic wave is transmitted in air, the energy of waves will be decreased along with the increasing of distance. Therefore, relatively bigger magnification times should be set when the ultrasonic wave receives circuit design. In addition, in order to reduce the influence of environmental noise on ultrasonic echo signal, the filter property of circuit must be taken into consideration for convenience of back wave detection.[4] Therefore, this system adopts an infrared ray wave, which has functions like amplification, amplitude limiting, band-pass filtering, peak detection, wave shaping, etc., for receiving specific chip CX20206A. The ultrasonic receiving circuit is shown as Figure 4.

Operating principle: the ultrasonic waves reflected from obstacles can be turned to electrical signals through receiver sensor, and be given to the foot 1 of CX20206A chip. Through processing, the foot 7 of chip will generate a low level for singlechip P3.2 opening. When the singlechip receives interrupt signal, it shows that the receiving circuit has received the reflected ultrasonic wave. In other words, it enters the interruption service program. In interruption program, the timer count value can be read, and the time as well as distance can be calculated.

3.3 Design of LED display circuit.

The displayer is made up of three common-anode LED Nixie tubes, which adopts dynamic scanning mode, and displays the distance unit as m. The distance unit can be as accurate as 0.01m. The display circuit is shown as Figure 5. After the system transfers the display program, the distance d will be firstly turned to display segment code. LED will be driven through singlechip P1 opening to conduct segment selection and through P2 opening to conduct bit selection, realizing the function of displaying distance.

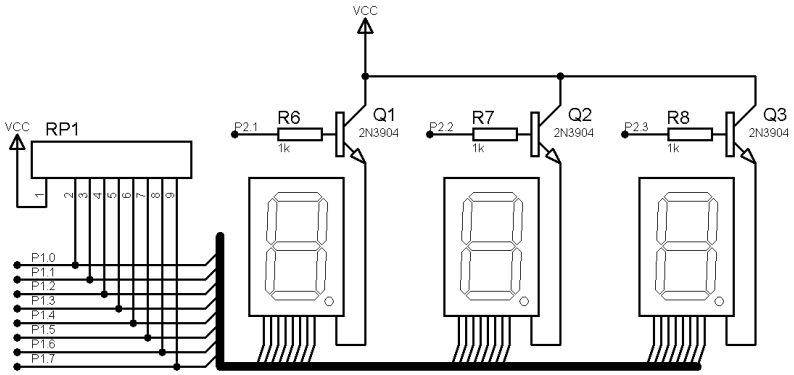

Fig. 5 LED display circuit

3.4 Design of alarm circuit.

After the system transfers the alarm program, the range of distance will be firstly judged. When the distances are in various ranges, singlechip will generate signals of certain frequency, and P3.0 opening will drive loudspeaker to alarm. The closer the distance is, the higher the sound frequency of alarm will be. Alarm circuit is shown as Figure 6.

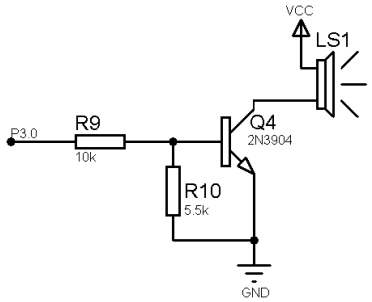

Fig. 6 alarm circuit

4. Software design of auto reversing system

4.1 Design of main program.

Main program flow diagram is shown as Figure 7.

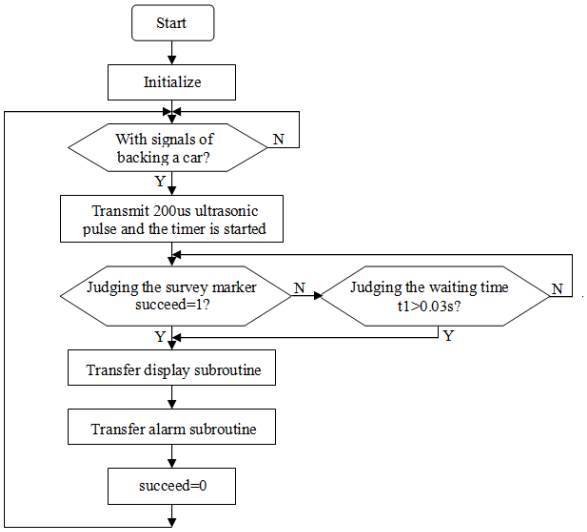

Fig. 7 Main program flow figure

After clicking to start, the system will transfer the initializer. In process of initialization, the way of T0 will be adopted for timing with fixed value as 0. It allows T0 interruption, INT0 interruption and overall interruption. INT0 interruption chooses the trailing edge modulation, draws high the P2.4 opening of ultrasonic emission control electric level, and sets succeed as zero. Afterwards, we should judge whether the automobile has been turned to reverse gear. If it has not, we should get back to continue judging; if it has, the ultrasonic pulse train of 40 KHz will be transmitted with transmission time as 200us. At the same time, the timer will start. It is regulated in this system that a pulse train will be transmitted every 30ms and 8 pulses will be transmitted every time. Then we should check whether the ultrasonic receiving circuit has successfully received the ultrasonic wave. If it is, after interrupt handling routine calculates the distance, display subroutine and the alarm subroutine will be transferred, and the measurement sign will be reset. If it is not, we should check whether the waiting for receiving has been overtime.

4.2 Design of INT0 interruption subroutine (distance calculation subroutine).

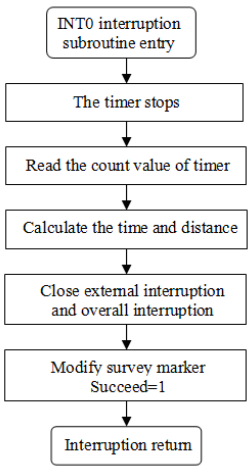

Fig. 8 INT0 interruption subroutine flow figure

4.3 Alarm program design.

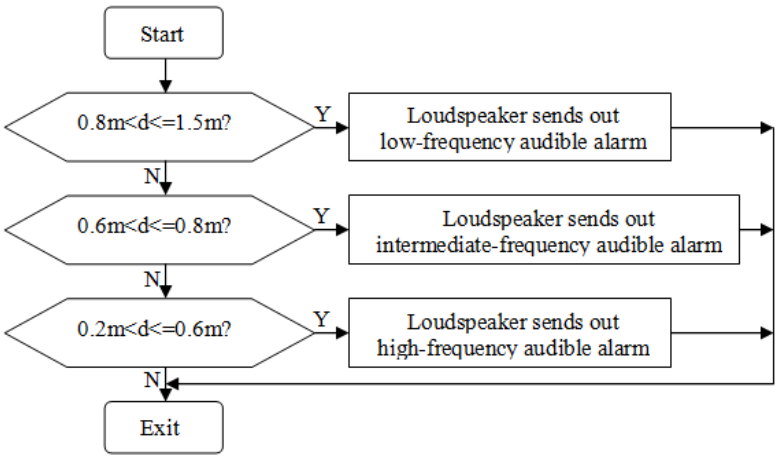

Fig. 9 Alarm program flow figure

5. Conclusion

This paper takes AT89S51 singlechip as core control unit, combines ultrasonic transducer, ultrasonic transmission circuit, receiving circuit, and corresponding software, and accomplishes the design of an auto reverse collision alarm system. This system can generate ultrasonic waves of 40 KHz, realize the transmission and receiving of ultrasonic waves, measure the distance among objects in ultrasonic ways, and use LED to display measured distance.

References

[1] Wei Suilin: Design and Realization of Car Reversing Anti-Collision Warning System Based on Single Chip Computer, Modern Electronics Technique, No.21, 2009, p.160-163.
[2] Gao Meixia, Bai Jianpu: The Design of Ultrasonic Ranging Auto Reverse System Based on Single Chip Microcomputer, Techniques of Automation and Applications, Vol.30, No.11, 2011, p.57-60.
[3] Qiu Chengqun, Hu Tianyun: The Reverse Collision Avoidance Vehicle Alarm Apparatus System Design Based on Single-chip Microcomputer, Modern Manufacturing Engineering, No.12, 2010, p.111-114.
[4] Gao Yuehua: Design of Reversing Radar Alarming System Based on Ultrasonic Wave Sensor, Piezoelectrics& Acoustooptics, Vol.33, No.3, 2011, p.429-431.