The Design of Double Closed Loop DC Speed Control System

Chao Tang

Electronics and Information Engineering, Changchun University of science and technology, Jilin Changchun 130022, China

Abstract

This paper mainly studied the 51 series single-chip microcomputer as the core of double closed-loop dc speed regulating system. So as to realize the system by single chip microcomputer control PWM signal to the dc motor speed control. Using MATLAB software to realize the system modeling and simulation.

Keywords

AT89S51; Double closed loop; Dc speed control; PWM; Matlab

1. The working principle of double closed-loop dc speed regulating system

With the continuous development of speed control system and application , the traditional PI regulator of the single closed-loop speed control system can realize speed astatic regulation, and faster dynamic response can meet the general production machinery speed control requirements. In order to improve the productivity, request as soon as possible to shorten the time of starting, braking, reverse transition process, is the best way to stay current in the process of transition to allow the maximum value, make the system as much as possible in order to accelerate the start, after reaching the steady state rotational speed, and current immediately reduce, into the steady state operation of the torque and load balance[1].

To achieve the above requirements, the only way is to use current feedback control method, which USES the speed and current closed-loop speed control system to realize book. Set a regulator in the current control loop, dedicated to regulating electricity flow, so as to set up in the speed control system both speed and current regulator, forming speed and current double closed loop speed control. Double closed loop speed regulation control system adopted in the two regulator, adjusting the rotational speed and current respectively, the realization of cascade connection.

Speed and current double closed-loop dc speed regulation system, there are two regulator ASR and ACR speed regulator and current regulator, respectively, the two cascade connection, namely the speed regulator output as input of current regulator, with the output of the current regulator to control the trigger thyristor rectifier device. Both regulator output belt co., LTD., the output of the ASR limiter determines the maximum current of a given voltage regulator ACR, corresponding to the maximum current of motor; Current regulator ACR output limiting voltage limits the maximum voltage rectifier output value, namely the minimum triggering Angle alpha[2].

Double closed loop dc speed control system dynamic structure diagram is shown in figure 1[3]. Figure and respectively in the transfer function of speed regulator and current regulator:

$$W_{ASR}(S) = K_n \frac{\tau_n s + 1}{\tau_n s} \tag{1}$$

$$W_{ACR}(S) = K_i \frac{\tau_i s + 1}{\tau_i s} \tag{2}$$

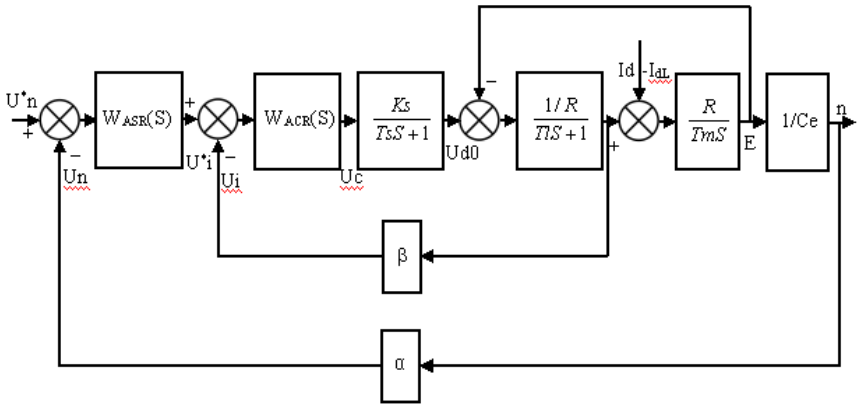

Figure 1 double closed-loop dc speed regulating dynamic structure

2. Double closed loop dc speed control system block diagram

System block diagram is shown in figure 2. This system adopts double closed loop dc speed control system, is to achieve the steady-state astatic system speed range is 0～1500r/min, Current overload ratio is 1.5 times, speed control precision is 0.1% (rated speed).

According to design requirements, the system design for the full digital control method, micro computer so finish: current loop controller, speed loop controller calculations, as well as their corresponding feedback signal sampling and digital signal processing.

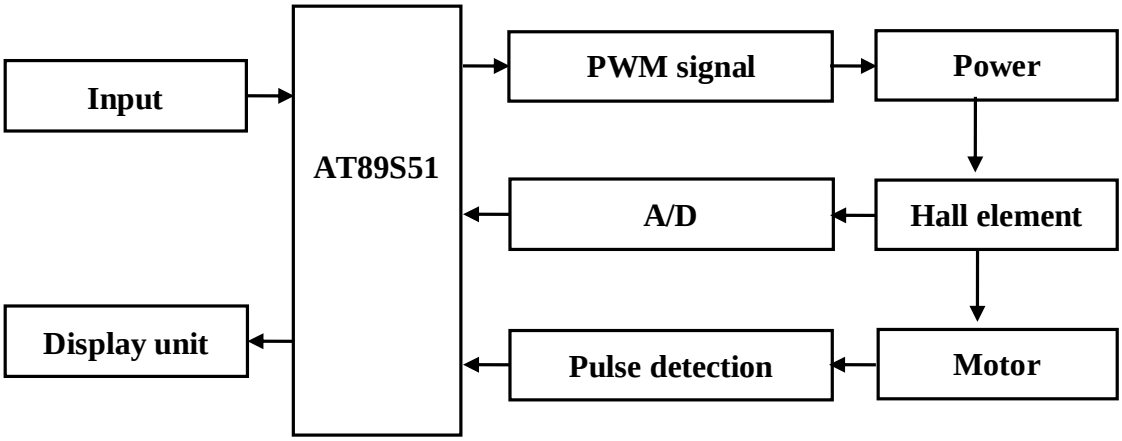

Figure 2 double closed-loop dc speed regulating system block diagram

This system USES hall element to test for the motor armature current sensor, its current capacity of 50, a conversion ratio of 1000:1. Hall element to detect the weak current signal after conversion, filter and amplification and become proportional to the armature current 0～5V dc voltage signal, then through A/D conversion circuit, the analog voltage is converted into digital quantity, enter A microcomputer. The system selects the photoelectric pulse signal generator as the speed of feedback measurement element, photoelectric pulse signal generator will motor rotor angular displacement quantity into pulse sequence, motor speed is obtained by the counter timer counter can digital feedback quantity. This system is controlled by a microcomputer to realize the whole system, using digital way to replace the traditional analog control mode, not only improves the system reliability, flexibility, but also for the whole system of multi-function, intelligent provides necessary conditions[4].

3. The simulation model and the simulation results

Speed transfer function of double closed-loop dc speed regulating system is mainly composed of a given link, ASR and ACR, limiting function, speed feedback loops and other parts. By adopting the method of transfer function diagram of double closed-loop system simulation model is shown in figure 3:

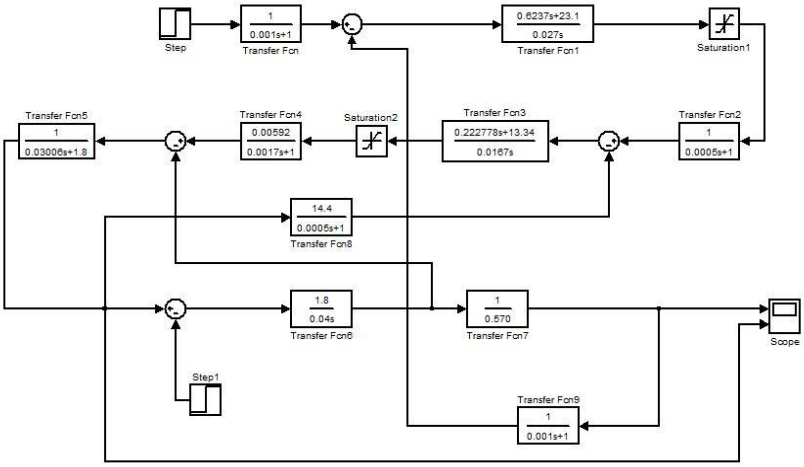

Figure 3 double closed-loop speed control system simulation model

Double closed loop speed regulation system of speed and current curve as shown in figure 4.

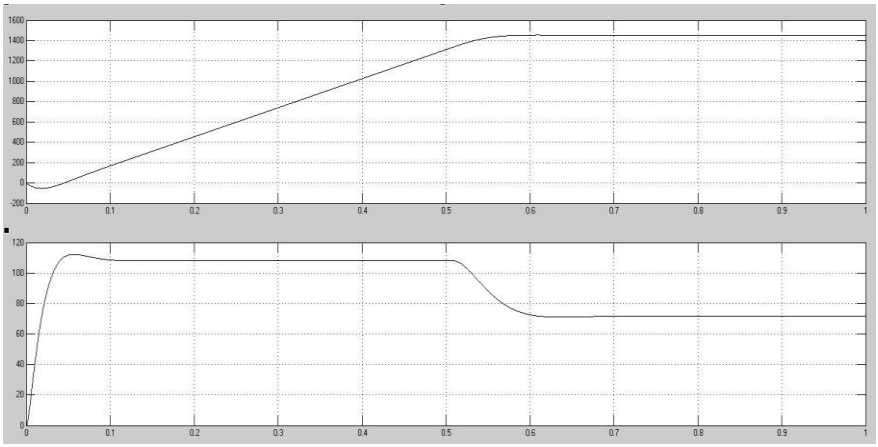

Figure 4 double closed loop speed regulation system of speed and current curve

In the current rising stage, due to the mechanical inertia of the motor is bigger, could not be started immediately. Speed regulator ASR saturated, current regulator ACR plays a main role. When arrived at constant current acc phase, the ASR has been in the saturation stage, can't afford to speed negative feedback regulation, speed loop is equal to the open loop state, the acceleration is constant value, the system of the motor speed is linear growth until the given speed is reached. Make the system started in the shortest possible time. When speed up to the rated speed, the ASR input deviation is 0, but the output due to the integral action remains limiting value, then also keep to the maximum current, lead to overshoot speed continues to rise. Overshoot ASR after exit saturated, the output voltage from the limiting value decreased, the main current decline. Since then, the motor under load resistance is to slow down, speed soon after small oscillation tends to be stable.

References

[1]Zhaoan Wang,Jinjun Liu. Power electronic technology [M]. Beijing: Mechanical industry press, 2009.

[2]Ruiguang Lin. Electrical and drag the foundation[M].Zhejiang: Zhejiang University press,2012.

[3]Longju Zheng，Huifang Li. Motor speed design based on single chip microcomputer[J]. Automa tion and instrumentation, 2015, 3:43-45.

[4]Anaphat Upasan,Yuttana Kumsuwan.Closed Loop Speed Control of Induction Generator with Sc alar-control Inverters[J].Energy Procedia,2013(34):371-381.