Design of zero crossing trigger power regulator

Chenjie Zhang

Changchun University of Science and Technology, Changchun 130022, China

Abstract

Pass zero pulse is that transfer the work device to change cycle several broken proportion way promptly to control, because of small interfering at the time of the outside work, so it is adopted in a large amount in the production field of industry and agriculture at present, and used in hot inertia heavy electric heat load usually, which has already made the enormous achievement in electric heating control. The paper offer passing zero touch off what switch circuit make up single-phase to exchange part which transfers work device has much advantage , accurate controlling , high reliability, low costs, small of space . And zero touch off part which transfers work to lead coherent in voltage and zero point of electric current, can dispel electric current bludgeon into.

Keywords

Adjusts the merit Crystal thyratron Pass zero trigger.

1. Introduction

Thyristor power regulator is widely used in modern electronic control equipment. It can save the heavy power transformer, the instrument has compact structure, easy to carry, convenient adjustment, suitable control. In many applications, thyristor power regulator circuit has a significant advantage. Phase shifting trigger and zero crossing trigger are often used in the thyristor power regulating circuit at present.

Thyristor with zero trigger mode is a ideal working state. At this time due to the supply voltage minimum, connected to electric appliances can avoid the impulse current and sine wave to complete added to the load. Not only conducive to the protection of the components of the safe use and the load operating stability, and pollution to the grid is small, reducing the interference to other equipments. On the other hand, in a given period, by controlling the number of sine wave can be controlled can so as to achieve the purpose of adjusting load on the power.

There are many at home and abroad used to produce zero-pulse method, such as: integrated comparators with special produced a zero pulse, using op amps or comparators produced a zero pulse, taken directly from the three-phase grid through the zero pulse and so on.

2. Principle of the zero passage trigger capacity control

The system circuit is designed by the zero crossing trigger switch circuit composed of single phase AC power regulator. The so-called zero crossing trigger is to give the thyristor to trigger pulse, so that the working state of the thyristor is always in full or full block. AC zero trigger switch circuit is used to control the thyristor conduction and turn off.

The so-called power adjustment, that is, in a certain period of time change of conduction cycle number. To change the average voltage of thyristor output or average power and conduction of cycle number more, the average output voltage or average power higher. Conversely, the smaller

Power regulator is within the set period range of the circuit is switched on a few cycles and then disconnect a few cycles, by changing the thyristor in the set period of on-off time ratio to adjust the load

average at both ends of the AC voltage, load power, also known as frequency controller. It is zero trigger thyristor conduction of (in fact from zero point 3 ~ 5 degrees), so the load has is complete sine wave in the power supply voltage, the regulation is in the set period TC guide through the voltage and frequency.

For power frequency AC power source, the frequency f = 50Hz, if the control cycle is 1s, then N＝2×f×T＝2×50×1＝100, Then adjust, can be adjusted in the range of 0-100 integer N. In the 1s, the average power of the load is obtained by the half wave number n = 50 of the thyristor: P=$\frac{n}{2f}Pe=\frac{50}{2}\times\frac{1}{50}$Pe=0.5Pe, that is half of the original power value. It can be seen that the output power can be adjusted by controlling the number of the half wave (i.e., the control n value) of the thyristor. The principle of power transfer mode is shown in Figure 1.

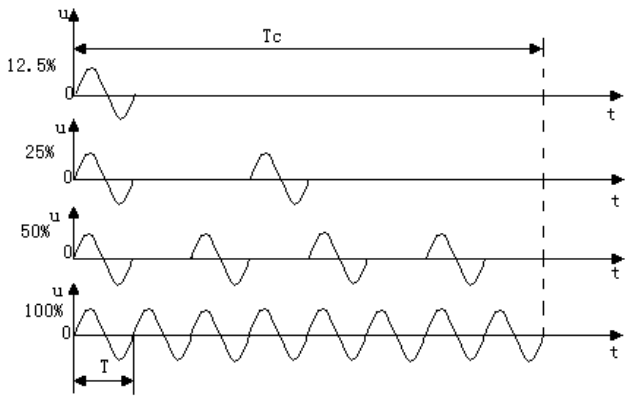

Fig. 1 load voltage diagram

3. Design of zero crossing trigger circuit

The zero crossing trigger circuit is composed of five parts, which are: the occurrence of the saw tooth wave, the signal synthesis, the DC switch, the synchronous voltage and the zero crossing pulse output.

3.1 Generation of saw tooth wave

Because the bottom width of the saw tooth corresponds to a certain time interval Tc, the adjusting potentiometer RP1 changes the slope of the saw tooth wave, thereby changing the output time interval of the saw tooth wave Tc. However, due to the partial pressure ratio of the single junction transistor, so the capacitor C1 discharge voltage is certain, the slope of the reduction, it means that the width of the base of the serrated wave increases (Tc). Conversely the bottom width decreases (Tc decreases).

Saw tooth wave is generated by a relaxation oscillator composed of single junction transistor V8 and R1, R2, R3, RP1 and C1, the emitter follower (V1, R4) output. The circuit is shown in figure 2:

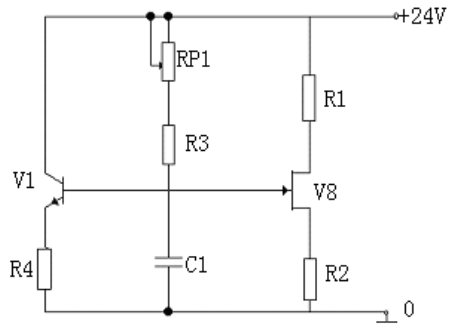

Fig. 2 generating circuit of saw tooth wave

3.2 Design of signal integrated circuit

The control voltage (Uc) current superposition is sent to the V2 base and the saw tooth wave voltage, the voltage of Us synthesis. When Us > 0 (that is, the base voltage Ube2>0.7v), then the V2 conduction; conversely, if Us < 0, then the V2 cut off. The signal integrated circuit shown in Figure 3 is composed of a transistor V1, a resistor R5, a R6, a R7, and a diode, and a control power supply.

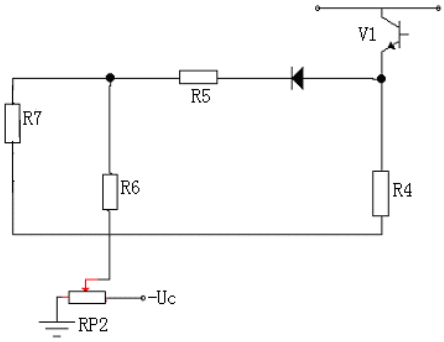

Fig. 3 signal integrated circuit

3.3 DC switch

When the base voltage of Ube2 0.7V > V2, V2 tube conduction, this time through the voltage regulator tube V6 and resistance R9, so that Ube3 close to zero potential, V3 tube, DC switch blocking. While V6 provides a threshold voltage for the V3, so that the V2 conduction, V3 more reliable cut-off. When the base voltage Ube2 0.7V "V2", the V2 cut-off, by the R8, V6 and R9 components of the voltage circuit so that the V3 conduction, at this time the DC switch on, the output 24V DC voltage. The circuit is shown in Figure 4.

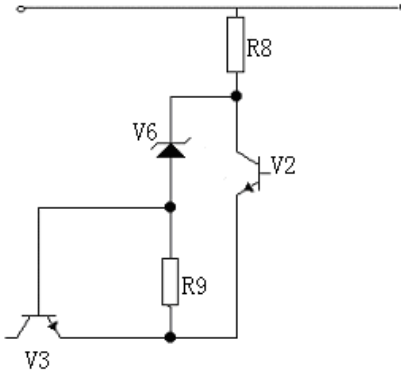

Figure 4 DC switching circuit diagram

3.4 Generation of synchronous voltage

The synchronous voltage is obtained by the secondary pole of the synchronous transformer, and the primary circuit is provided with a power supply of the main circuit and the main circuit. Synchronous signal by single phase bridge rectifier and then cut through the voltage regulator tube to become trapezoidal wave. Due to the thyristor only in the positive half week of AC may conduction, in order to enable each positive half cycle, thyristor conduction through angles are consistent, namely in the same phase and trigger pulse, thyristor thyristor trigger circuit in each power is half of the week, issued the first pulse at the same time, this is the so-called trigger pulse and the main circuit power supply voltage "synchronization".

This part is composed of the synchronous transformer Ts, rectifier bridge VD1, resistance R9, R10 and voltage regulator tube V7 composed of a clipping synchronous power supply, the trigger circuit voltage is taken from both ends of the thyristor. After the resistance R10, voltage regulator tube V7 to carry out a limit, after the resistance R12 and R11 to reduce the voltage, to the transistor V4 after amplification,

inverted phase, from the collector output of the positive pole zero pulse. The circuit diagram is shown in figure 5:

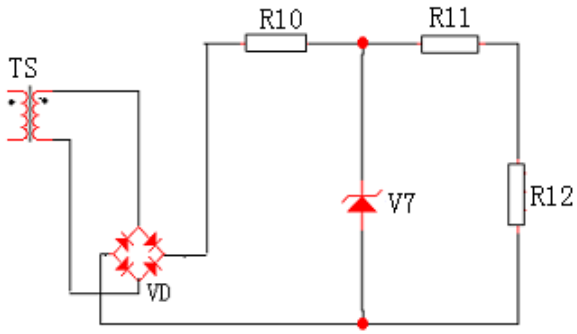

Fig. 5 circuit diagram of synchronous voltage generation

3.5 Zero crossing pulse output

This part of the circuit is mainly composed of transistor V4, V5, diode, resistance, pulse transformer, capacitor. The circuit is shown in Figure 6 below:

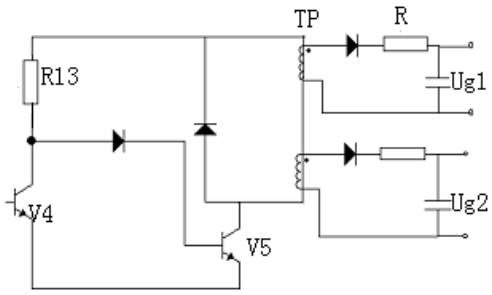

Fig. 6 zero crossing trigger pulse output circuit

In the synchronous voltage cut wave synchronous voltage source and DC output switch voltage together to control V4, V5, only when the DC switch turn-on period (i.e. V2 cut-off, V3 guide through time), V4, V5 the collector and emitter electrode to voltage, in order to carry out the work. During this period, the synchronous voltage is zero, the V4 cut-off, the collector outputs a positive voltage, so that the V5 is turned on, the pulse transformer output trigger pulse, which makes the thyristor conduction.

The trigger pulse is shown in figure 7:

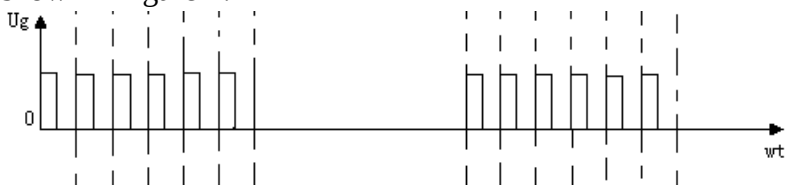

Fig. 7 trigger pulse waveform

So during the DC switch, the output of a continuous sine wave, the load voltage waveform is obtained as shown in Figure 8 below:

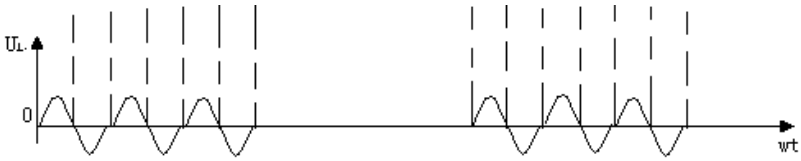

Fig. 8 waveform of load voltage

4. Conclusion

Phase shift trigger and zero crossing trigger are the two main ways of thyristor control system. Due to the phase shifted trigger mode will cause the waveform distortion of the voltage of the power supply, but also can produce high frequency radiation interference, so on many occasions by zero crossing triggering better.

Zero crossing trigger circuit is in power grid voltage zero crossing trigger thyristor conduction, through the change of the conduction and turn off of the Zhou Boshu ratio-------- that is, the thyristor cut off to change the load average voltage or average power. The higher the cut ratio, the higher the average output voltage (power), and the smaller the. At this time, the voltage waveform of the load is always complete sine wave, so it will not produce waveform distortion and high frequency interference. As a high power electronic device, thyristor is widely used in engineering, and its zero crossing trigger control mode is not polluted.

Reference

[1] Edwards C W, Mattern K E, Stacey E J, et al. Advanced Static Var Generator Employing GTO Thyristors. IEEE Transactions on Power Delivery . 1998.

[2] Mohammad S Naderi, T.R .Blackbum, Mehdi S. Naderi, A.Nasiri. Application of wavelet analysis to the determineation of partial discharge location in multiple-α transformer windings. Electric Power Systems Research . 2008.